Hydrogen Production from Reforming of Cooking Oil with Carbon Dioxide Removal Process

Watchrapong Inpakdee, Narissara Chatrattanawet and **Yaneeporn Patcharavorachot**

Department of Chemical Engineering, Faculty of Engineering,
King Mongkut's Institue of Technology Ladkrabang, Bangkok, Thailand

Manuscript received August 25, 2018
Revised November 2, 2018

ABSTRACT

This work presents the hydrogen production process from both fresh and used cooking oils. The integration of autothermal reforming and adsorption process was proposed to provide the purified hydrogen. Aspen Plus simulation based on thermodynamics calculation was performed to determine the optimal operating conditions for hydrogen production. When the Effects of oil types, steam to carbon molar ratio, reforming temperature and pressure and amount of calcium oxide on hydrogen production were examined. The results showed that the reformer should be operated at 900 K, atmospheric pressure and steam to carbon molar ratio of 5. The optimal operating conditions of adsorption process are 600 K, atmospheric pressure and amount of calcium oxide as 18 kmol/hr. For the effect of oil types, it was found that the used vegetable oil can produce the highest amount of hydrogen, followed by fresh vegetable oil, used animal fat and fresh animal fat, respectively.

Keywords*: Hydrogen production, cooking oil, autothermal reforming, adsorption.*

1. INTRODUCTION

Nowadays, energy plays a significant role in economic development in all countries. This leads to an increase in global energy demand. However, the consumption of fossil fuel-based energy encounters two main issues: (1) the depletion of fuel, resulting in the price crisis and (2) the emission of greenhouse and other gases to the atmosphere, leading to climate change. In order to solve these problems, hydrogen is regarded as an ideal energy source to replace the fossil fuel in the future since hydrogen is non-toxic and can be used as a fuel in the combustion engines without the emission of pollution.

In general, hydrogen can be produced through different processes, e.g. thermochemical, electrolysis and photolytic processes. Among these, thermochemical process is commonly used to produce hydrogen from hydrocarbon fuel. Today, 95% of hydrogen is produced from fossil fuels, such as natural gas and oil. However, the use of fossil fuels as feedstocks causes the problems as aforementioned. Therefore, the use of renewable resources has been interested in this work. Biomass is an efficient renewable energy since the use of biomass helps reduce dependence on fossil fuels. Biomass is a clean renewable energy source. It can be used to produce useful fuels, such as hydrogen, carbon dioxide, methane, and others. Among various kind of biomass, vegetable oils are one group of the renewable energy sources that low oxygen content and high potential yields of hydrogen [1]. Besides the vegetable oils, animal fats are also considering in this work since it can be used widely. In addition to fresh vegetable oils and animal fats, the used cooking oils can be considered as one of feedstocks for hydrogen production. The used cooking oils are generated in large scale to be incapable of reusing because when it has been heated; it can cause some serious health hazards. The use of cooking oil may contain possibly carcinogenic free radicals. Interestingly, its price is cheaper compared to other biomass [2].

As mentioned above, hydrogen can be produced through thermochemical processes which are included steam reforming (SR), partial oxidation (POX), and the combination of steam reforming and partial oxidation commonly known as autothermal reforming (ATR). Comparison between advantages and disadvantages of each process, it is found that the ATR has received much attention since this process can produce hydrogen more than partial oxidation, whereas it requires the external energy less than the steam reforming [3]. For this reason, the ATR can provide high ratio of hydrogen to carbon monoxide and reduce the cost of production.

However, the gas products or synthesis gas obtained from reforming process will contain highquantities of carbon dioxide. As a result, the concentration of hydrogen is reduced. If the main target of production is the highest amount of hydrogen and thus, the separation of carbon dioxide from synthesis gas is required to increase the purity of hydrogen. One of attractive techniques for removing carbon dioxide from synthesis gas is the adsorption process. Calcium oxide (CaO) has been widely used as adsorbent due to low price, ease to use and high adsorption capability [4].

In order to examine hydrogen production from cooking oil, model of autothermal reforming integrated with adsorption process is developed and simulated through Aspen Plus simulator. There are four types of cooking oils considered: fresh vegetable oil (FVO), used vegetable oil (UVO), fresh animal fat (FAF) and used animal fats (UAF). Then, the effect of operating condition of reformer and adsorption process is investigated to determine the optimal operation for hydrogen production.

2. PROCESS DESCRIPTIONS

Fig. 1 presents hydrogen production of cooking oil through autothermal reforming integrated with adsorption process. For autothermal reforming, two agents, i.e., steam (STEAM) and oxygen (O2) are prior mixed in the mixer (MIXER1). Then, the cooking oil (OIL) and reforming agent (MIX1) are further mixed in the second mixer (MIXER2). Before feeding the mixture of the cooking oil and reforming agent (MIX2) to the reformer, the mixture is preheated in the heater (HEATER1) to achieve the desire temperature. Then, the preheated stream (IN-REF) is supplied to autothermal reformer (REFORMER). In the reformer, there are many chemical reactions carried out. Eqs. (1)-(11) express the possible chemical reaction occurred in the autothermal reformer.

UCO partial oxidation:

$$C_xH_yO_z + (x/2 - z/2)O_2 \leftrightarrow (y/2)H_2 + xCO \quad (1)$$

UCO oxidation:

$$C_xH_yO_z + (x + y/4 - z/2)O_2 \leftrightarrow (y/2)H_2O + xCO_2 \quad (2)$$

Water gas shift:

$$CO + H_2O \leftrightarrow H_2 + CO_2 \quad (3)$$

Alkane steam reforming:

$$C_XH_{2x+2} + xH_2O \leftrightarrow xCO + (2x + 1)H_2 \quad (4)$$

Alkane partial oxidation:

$$C_XH_{2x+2} + (x/2)O_2 \leftrightarrow xCO + (x + 1)H_2 \quad (5)$$

Methane dry reforming:

$$CH_4 + CO_2 \leftrightarrow 2CO + 2H_2 \quad (6)$$

Methane decomposition:

$$CH_4 \leftrightarrow 2H_2 + C \quad (7)$$

Methanation of CO:

$$3H_2 + CO \leftrightarrow CH_4 + H_2O \quad (8)$$

Methanation of CO_2:

$$4H_2 + CO_2 \leftrightarrow CH_4 + 2H_2O \quad (9)$$

Oxidation of carbon monoxide:

$$CO + 0.5O_2 \leftrightarrow CO_2 \quad (10)$$

Oxidation of hydrogen:

$$H_2 + 0.5O_2 \leftrightarrow H_2O \quad (11)$$

Carbonation:

$$4CaO + CO_2 \rightarrow CaCO_3 \ \Delta H_{650} = -171 \text{ KJ/mole} \quad (12)$$

Calcination:

$$CaCO_3 \rightarrow CaO + CO_2 \ \ \Delta H_{900} = 178 \text{ KJ/mole} \quad (13)$$

The gas product exited from the reformer (EX-REF) is further sent to cooler (COOLER1) to decrease temperature. After that, it is delivered to the absorber (ADSORB) where CO_2 in EX-REF stream reacts with CaO (CAO-IN) and then, $CaCO_3$ (CACO3) can be provided through carbonation reaction (Eq. (12)). In order to regenerate CaO, $CaCO_3$ is directly supplied to the regenerator (REGEN) where rich CO_2 is separated from $CaCO_3$ through calcination reaction (Eq. (13)). In addition, the flash separator (FLASH) is employed to remove residual water and thus, hydrogen concentration is higher. The reformer, absorber and regenerator are modeled by *RGibbs* reactor, whereas the WGS is represented by *REquil* model. It is noted that *RGibbs* model can deal with the solid component.

3. METHODOLOGY

In the process simulation through Aspen Plus simulator, there are two assumptions made: (1) the process is operated under the steady state condition and (2) all chemical reactions are at equilibrium. The thermodynamic analysis was performed based on the property method of UNIF-LBY. When the operating conditions of reformer (i.e. temperature, pressure, steam to carbon ratio, oxygen to carbon ratio) and composition

of feedstock are specified simultaneously with the operating conditions of absorption process, the equilibrium product composition can be calculated based on the total Gibbs free energy minimization method. Cooking oils used in this work contain mainly triglycerides and long-chain fatty acids. Table 1 shows the main compounds of FVO, UVO, FAF and UAF.

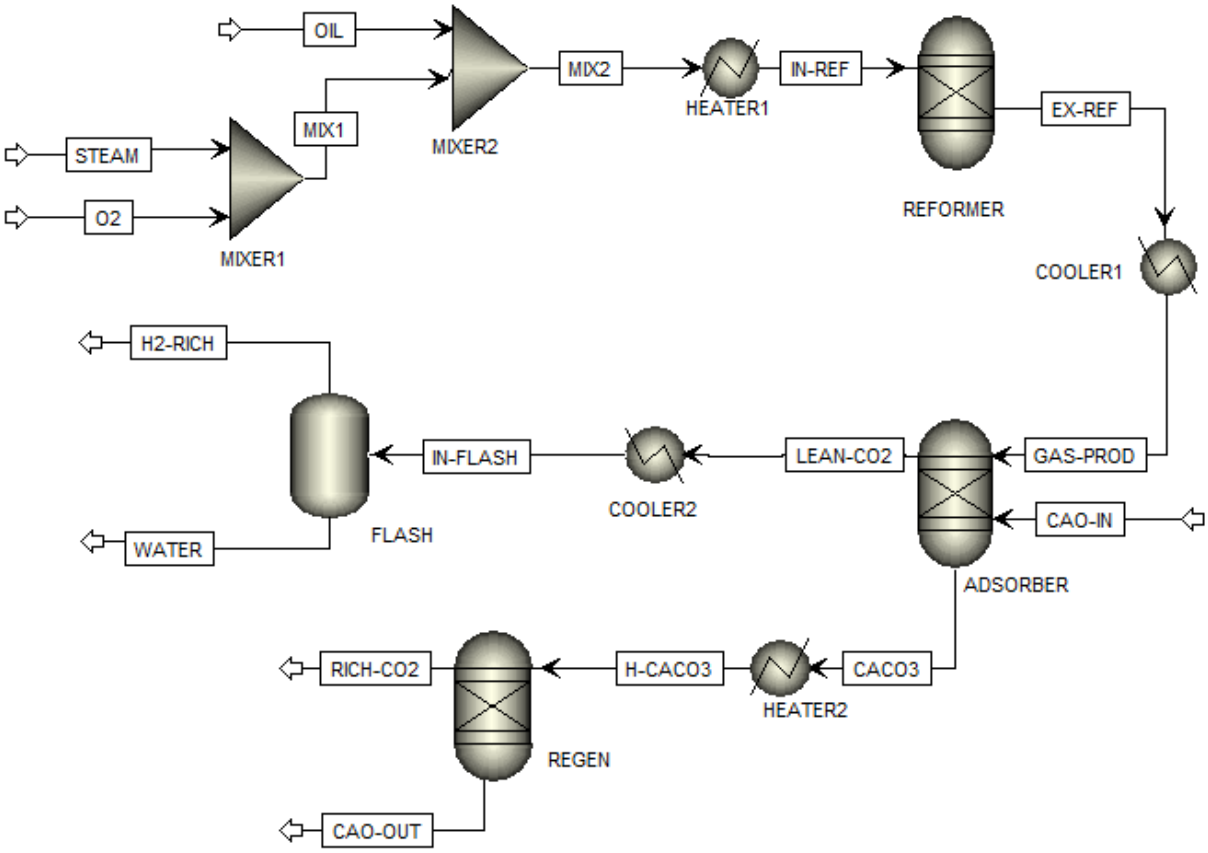

Fig. 1 *Schematic of hydrogen production through autothermal reforming integrated with adsorption process.*

Table 1 *Main compounds of feedstocks [5-6]*

Fatty acids	Chemical structure	Mass fraction (%)			
		FVO	UVO	FAF	UAF
Palmitic	C16:0	0.1058	0.104	0.29	0.2239
Stearic	C18:0	0.0476	0.0451	0.15	0.1281
Oleic	C18:1	0.2252	0.2437	0.45	0.4253
Linoleic	C18:2	0.5234	0.519	0.1	0.1207
Linolenic	C18:3	0.0819	0.0652	-	0.0081

4. MODEL VALIDATION

To ensure that the proposed model can predict the hydrogen production, the comparison between the simulation results and experimental data extracted from Rafiq and Hustad [7] is performed. They studied the hydrogen production through autothermal reforming of vegetable oil. Under same operating conditions as temperature of 850 K, pressure of 1 bar, steam to carbon molar ratio of 1 and oxygen flow rate of 369.84 NL/hr, the mole fractions of each component at different water flow rates obtained from simulation are agree with the experimental data, as shown in Fig. 2.

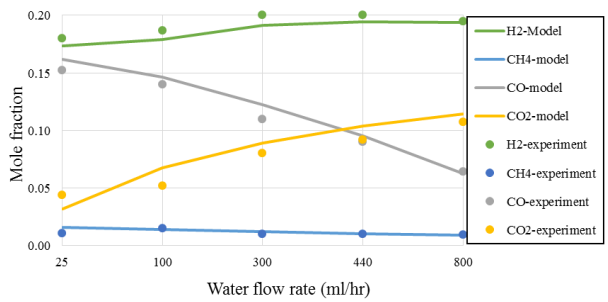

Fig. 2 *Comparison of the molar ratios of each component between the simulation results and the experimental data.of Rafiq and Hustad [6].*

5. RESULTS AND DISCUSSION

In the simulation, the cooking oil and oxygen are fed into the reformer with 1 kmol/hr. It is found that oxygen to carbon ratio is 1. Other parameters, i.e.reformer temperature, reformer pressure and SCR, are varied to identify the optimal condition. The effect of operating condition of reformer is presented in Section 5.1. Section 5.2 shows the investigation of adsorption process with respect to the wider ranges of temperature, pressure and CaO amount. It is noted that the used vegetable oil is employed to study in Sections 5.1 and 5.2. Finally, the effect of oil types on hydrogen production is shown in Section 5.3.

5.1 Effect of Reformer Operation

Fig. 3 demonstrates the effect of temperature and pressure of autothermal reformer on hydrogen production. Considering reformer temperature effect, it can be seen that mole fraction of hydrogen increases with increasing temperature in the range of 800 to 1,000 K at a fixed steam to carbon ratio (S/C) of 5. This is because the autothermal reforming is endothermic reaction, equilibrium shifts towards products side with increasing temperature, leading to an increase in hydrogen production. The simulation result indicates that the maximum hydrogen content can be obtained when the reformer is operated at 900 K.

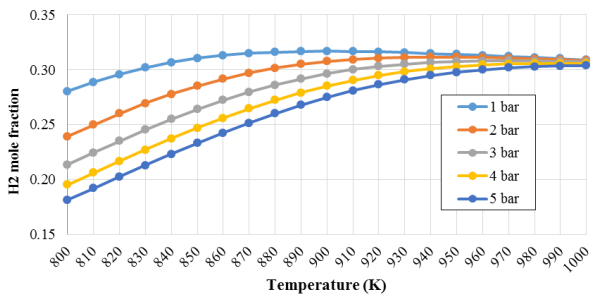

Fig. 3 *Effect of temperature and pressure of autothermal reformer on hydrogen production at SCR = 5.*

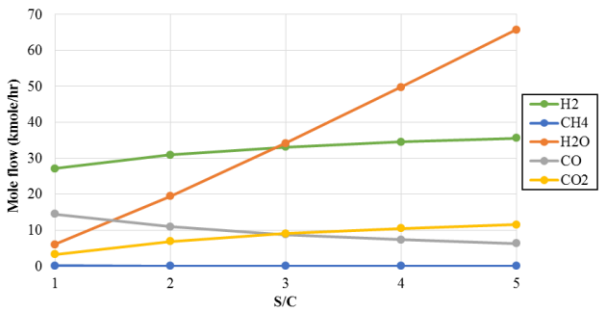

Fig. 4 *Effect of steam to carbon ratio on hydrogen production at 900 K and pressure of 1 bar.*

For the pressure effect, it is found that hydrogen production decreases with increasing pressure in the range of 1 to 5 bar at a fixed temperature of 900 K and S/C of 5. The simulation result indicates that hydrogen production increases with decreasing reformer pressure to atmospheric pressure or 1 bar. Therefore, the autothermal process should be operated close to atmospheric pressure.

The effect of S/C on hydrogen production at temperature of 900 K and pressure of 1 bar is illustrated in Fig. 4. It can be observed that, molar flow rate of hydrogen can be increased with increasing S/C in the range between 1 and 5 at a fixed temperature and pressure. Since an increase in S/C means that the amount of steam in reactant side is higher, the equilibrium of autothermal reaction shifts towards the products side (Eq. (4)) which leads to the increased hydrogen production. Moreover, the increase of S/C also promotes the reverse methanation reaction (Eqs. (8)-(9)) and this leads to higher hydrogen production. However, Fig. 4 shows that the amount of steam in the gas product is also higher with increasing S/C and this may cause the dilution of hydrogen content. Moreover, the use of higher amount of steam in feed is meant that more energy is required to vaporize feed stream. Thus, the suitable S/C should be carefully selected.

From the simulation of autothermal reformer, it can be concluded that the optimal operating condition of temperature and pressure of reformer is 900 K and 1 bar, respectively. The S/C of 3 is selected as a proper ratio. Under this condition, the gas product consists of 39% hydrogen, 40% steam, 10% carbon monoxide and 11% carbon dioxide.

5.2 Effect of Absorber Operation

This section presents the influence of adsorber temperature and amount of CaO on the mole fractions of carbon dioxide (Fig. 5). Effect of temperature in range of 600 and 800 K is investigated whereas pressure is fixed at 1 bar. It is noted that the mole fraction of carbon dioxide considered is carbon dioxide in *LEAN-CO2 stream*. From Fig. 5, it can be seen that higher temperature operation of adsorber will cause an increase in carbon dioxide mole fraction. This is due to the fact

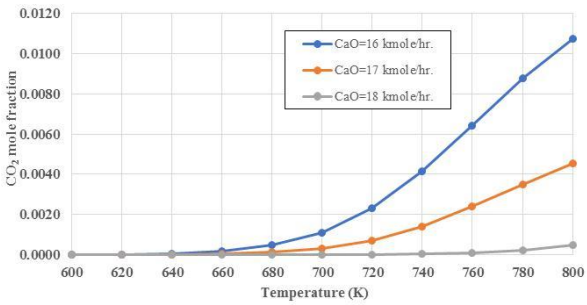

Fig. 5 *Effects of temperature and amount of calcium oxide in adsorber at 1 bar on CO_2 mole fraction.*

that the carbornation reaction occured in absorber (Eq. (12)) is exothermic reaction and this is favorable to low temperature operation. From the simulation result, it is found that the appropiate temperature range is at 600 K.

Then, the effect of amount of CaO on carbon dioxide mole fraction is considered. At fixed temperature, it can be observed that increases of amount of CaO can decrease carbon dioxide content; and this is implied that hydrogen content can be improved. When more CaO is added into the absorber, it can react with carbon dioxide in gas product. The results indicate that adsorber operated at temperature of 600 K can provide hydrogen as 35%, 39% and 42% for CaO flow rate at 16, 17 and 18 kmol/h, respectively. Since the use of CaO as 18 kmol/h not only increase hydrogen content but also decrease steam amount, this amount of CaO is determined as an appropriate value.

5.3 Effect of Oil Types

Finally, the influence of using different oil types, i.e., FVO, UVO, FAF and UAF on hydrogen production is investigated. It is noted that the vegetable oil is soybean oil whereas animal fat is lard. Considering the reformer temperature and S/C effects, it is found that the results are similar trend even the types of oil are different. Table 2 summarized the hydrogen content obtained from different types of oil. The results indicate that UVO can produce the highest amount of hydrogen, followed by UAF, FVO and FAF, respectively. In the point of chemical, vegetable oil is an ester of glycerin and three long-chain fatty acids, and is commonly referred to a triglyceride. All triglycerides have the same glycerin unit, so it is the fatty acids that contribute to the different properties of the various vegetable oils which mainly component of vegetable oil is long chain hydrocarbon of fatty acids compared with animal fat such as oleic acid and palmitic acid. The used vegetable oil can produce the highest amount of hydrogen since used vegetable oil was heated to elevated temperature. It may cross chemical reactions, hydrolysis, oxidation and polymerization.

Table 2 *Gas composition obtained from autothermal reformer with different types of oil*

% Mole	FVO	UFO	FAF	UAF
H_2	38.91	39.02	38.84	38.90
H_2O	40.15	40.12	40.73	40.56
CO	10.30	10.25	9.98	10.07
CO_2	10.63	10.55	10.45	10.48

6. CONCLUSION

In this work, hydrogen production through autothermal integrated with CO_2 removal process by using different cooking oil, i.e., fresh and used vegetable

oil and fresh and used animal fat was presented. The effect of operating conditions in reformer and absorber was investigated to determine the optimal conditions. The results showed that the optimal operating conditions of reformer are at temperature of 900 K, pressure of 1 bar and S/C of 3. The adsorber should be operated at 600 K under atmospheric pressure by using amount of CaO of 18 kmol/h. The simulation result also indicated that used vegetable oil can produce the highest amount of hydrogen, followed by fresh vegetable oil, used animal fat, and fresh animal fat, respectively.

7. ACKNOWLEDGEMENTS

The support from King Mongkut's Institute of Technology Ladkrabang is gratefully acknowledged.

REFERENCES

[1] S.R. Yenumala and S.K. Maity, "Reforming of vegetable oil for production of hydrogen: A thermodynamic analysis", International Journal of Hydrogen Energy, vol. 36, pp. 11666-11675, 2011.

[2] D.C. Panadare and V.K. Rathod, "Applications of Waste Cooking Oil Other Than Biodiesel: A Review", Iranian Journal of Chemical Engineering, vol. 12, 55-76, 2015.

[3] S. Authayanun, A. Arpornwichanop, W. Paengjuntuek and S. Assabumrungrat, "Thermodynamic study of hydrogen production from crude glycerol autothermal reforming for fuel cell applications", International Journal of Hydrogen Energy, vol. 35, 6617-6623, 2010.

[4] Y. Patcharavorachot, D. Saebea, S. Authayanun and A. Arpornwichanop, "Hydrogen and power generation from supercritical water reforming of glycerol and pressurized SOFC integrated system: Use of different CO_2 adsorption process", International Journal of Hydrogen Energy, vol. 43, pp. 17821-17834, 2018.

[5] J. Orsavova, L. Misurcova, J.V. Ambrozova, R. Vicha and J. Mlcek, "Fatty Acids Composition of Vegetable Oils and Its Contribution to Dietary Energy Intake and Dependence of Cardiovascular Mortality on Dietary Intake of Fatty Acids", International Journal of Molecular Sciences, vol. 16, 12871–12890, 2015.

[6] F. Gunstone, Fatty Acid and Lipid Chemistry; Blackie: London, 1996

[7] M.H. Rafiq and J.E. Hustad, "Biosyngas production by autothermal reforming of waste cooking oil with propane using a plasma-assisted gliding arc reactor", International Journal of Hydrogen Energy, vol. 36, 8221-8233, 2010.

W. Inpakdee, photograph and biography not available at the time of publication.

N. Chatrattanawet, photograph and biography not available at the time of publication.

Y. Patcharavorachot, photograph and biography not available at the time of publication.