(Research) article
Journal of Engineering Technology Access

MKU-1: Modular Real-Time Sensor Networks and Edge Computing for Precision Crop Management in the Eastern Economic Corridor

Montri Phothisonothai[1,*], Taddaow Khumpook[2], Natthapon Pannurat[1] and Warayost Lamaisri[3]

[1] *Department of Computer Engineering, Faculty of Engineering at Sriracha*

[2] *Department of Environmental Science and Technology, Faculty of Science at Sriracha*

[3] *Faculty of Economics at Sriracha*

Kasetsart University, Sriracha, Chonburi 20230, Thailand

[*]Corresponding Email: montri@eng.src.ku.ac.th

Abstract

This paper presents an Internet of Things (IoT)-based smart farming framework for the precision cultivation of medicinal and economic crops in Thailand's Eastern Economic Corridor (EEC). The proposed system was experimentally validated using *Capsicum annuum* (chili pepper) and *Ocimum tenuiflorum* (holy basil). The framework integrates a multi-sensor network for continuous monitoring of key environmental and soil parameters, including air temperature, relative humidity, light intensity, soil moisture, soil temperature, electrical conductivity, soil pH, and NPK nutrient levels. Sensor data are processed locally by the MKU-1 modular control unit, which functions as a lightweight edge-enabled automated control platform. At the field node, an ESP32 microcontroller performs sensor acquisition, data validation, timestamping, threshold-based decision execution, actuator control, and cloud synchronization without requiring immediate cloud feedback. In the current prototype, computationally intensive machine-learning analysis is performed offline or at the cloud level, while the field node is responsible for real-time local control of irrigation, fertigation, and supplemental lighting. Field experiments comparing system-assisted cultivation with conventional non-system cultivation demonstrated improved crop growth and greater environmental stability. For chili pepper, the system-assisted plot achieved a 16.4% higher average plant height than the non-system plot. For holy basil, system-assisted cultivation achieved an 11.5% higher average plant height and a 24.1% higher average number of leaves across the cultivation period. The system also maintained more stable soil moisture conditions, with average soil moisture values approximately 61.8% higher for chili pepper and 31.1% higher for holy basil compared with non-system cultivation. Feature-importance analysis showed that air temperature, light intensity, and relative humidity were the most influential factors affecting cultivation performance, with importance scores of 0.41, 0.17, and 0.13, respectively. The analytical model achieved an overall accuracy of 96.55%. Economic analysis for a representative 10-rai cultivation area indicated an estimated annual water-cost saving of THB 20,000, equivalent to THB 2,000/rai/year, and an estimated return on investment of approximately 25% per year. These results confirm that the proposed MKU-1 framework enhances cultivation efficiency, improves environmental control, reduces resource variability, and supports sustainable smart agriculture practices aligned with Thailand's BCG and EEC development strategies.

Keywords: Edge computing; Environmental monitoring; IoT-based smart farming; Precision agriculture; Sensor networks

I. INTRODUCTION

Agriculture remains a cornerstone of the national economy, serving as a key driver of growth and employment. In Thailand, agricultural land spans approximately 149.75 million rai, representing 46.7% of the total land area. The sector sustains around 7.8 million agricultural households and employs nearly 12 million workers, or about 51% of the national labor force. Despite its substantial contribution, approximately 9% of the country's Gross Domestic Product (GDP) [1], agricultural productivity and farmer income remain significantly lower than those observed in developed economies. This disparity is largely attributed to the continued reliance on traditional practices, a high dependence on manual labor, and limited adoption of advanced technologies. These challenges are further compounded by climate change and labor shortages, underscoring the urgent need for technological innovation in farming practices. Smart farming has emerged as a promising approach to address these limitations by leveraging digital technologies such as the Internet of Things (IoT), sensor network systems (SNS), and automation platforms. These technologies enable more efficient resource utilization, cost reduction, and enhanced crop quality, ultimately contributing to sustainable agricultural development.

The Eastern Economic Corridor (EEC), a flagship government initiative, plays a pivotal role in advancing this transformation. Covering the provinces of Chonburi, Rayong, and Chachoengsao, the EEC is envisioned as a leading economic hub, with targeted investments in ten industries including advanced automotive, smart electronics, biotechnology, digital technology, and high-value agriculture. Within this framework, agricultural development emphasizes five strategic clusters: tropical fruits (e.g., durian, mangosteen, mango), fisheries, industrial crops for the bioeconomy, medicinal herbs, and premium agricultural products. These clusters are prioritized for their high export value, potential for value-added processing, and alignment with international market demands. One notable initiative within the EEC is the establishment of an evaporative cooling ("Evap") greenhouse at the Pluak Daeng Development Center in Rayong Province [2]. This facility employs intelligent climate control to enable year-round cultivation of crops requiring tightly managed environments. While technically effective, the system's high installation costs present a barrier for small-scale farmers, limiting broader adoption.

To bridge this gap, this paper introduces a cost-effective, automated crop cultivation and management system that integrates IoT and SNS technologies. The proposed system enables real-time monitoring and automated control of ten critical parameters, including air temperature, relative humidity, light intensity, soil moisture, soil temperature, soil electrical conductivity, nutrient levels (NPK), and soil pH. By optimizing input use, improving yields, and reducing operational costs, the proposed framework supports both productivity gains and environmental sustainability. This experiment specifically examines the precision cultivation of medicinal herbs, focusing on *Capsicum annuum* (chili pepper) and *Ocimum tenuiflorum* (holy basil) within the EEC. The objectives are threefold: (1) to develop a scalable and user-friendly smart farming prototype suitable for open-field cultivation; (2) to encourage the adoption of advanced agricultural technologies within EEC communities; and (3) to strengthen local capacity through training and technology transfer. The anticipated outcomes include enhanced crop productivity, reduced resource consumption, and alignment with Thailand's Bio-Circular-Green (BCG) economic model.

II. Literature Review

Recent research highlights the integration of sensor networks (SNs) and edge computing as a transformative force in modern agriculture. SNs enable continuous and real-time monitoring of key environmental parameters such as soil moisture, air temperature, humidity, and nutrient content across different locations within a field. By processing multimodal data locally, edge computing reduces latency and provides immediate and actionable insights for farmers. This integration supports precision agriculture (PA) by enabling timely interventions such as optimized irrigation, targeted fertilization, and early pest detection. The increasing use of IoT and sensor technologies has become widespread in PA, with the aim of enhancing efficiency and reducing production costs as concluded in Table 1.

Several studies have contributed to the advancement of IoT-enabled smart agriculture systems. Heble et al. [3] developed a low-power IoT network focused on monitoring soil moisture levels. This sensor system reduces operational costs while enhancing soil condition monitoring capabilities. However, its accuracy is limited compared to industrial-grade equipment, which constrains its continuous deployment in PA systems.

Table 1. Summary of sensor networks and edge computing for precision crop management.

Feature	Sensor Networks	Edge Computing Integration
Real-time monitoring	Supported	Supported
Data processing	Local or remote	Local (on edge devices)
Latency	Moderate	Very low
Resource optimization	Supported	Automated and precise
Disease and pest detection	Supported (with imaging or AI)	Supported (real time, higher accuracy)
Energy efficiency	Active research focus	Optimized for edge device operation
Scalability	Good	Excellent (across different farm sizes)

Kamilaris et al. [4] proposed an IoT framework designed for smart farms that supports real-time data processing from distributed sensors. This framework facilitates rapid and accurate decision-making for farmers. Nevertheless, the high computational demands and the requirement for ongoing maintenance pose significant challenges for its practical implementation. Wongpatikaseree et al. [5] introduced an IoT-based farm tracking and monitoring system aimed at improving farm data traceability and decision support. The system enhances monitoring of agricultural product quality; however, its complexity may hinder user-friendliness and maintenance, limiting accessibility for some users. Maha et al. [6] developed a smart board tailored for precision farming that prioritizes ease of use, even for farmers with limited technical expertise. Despite its user-friendly interface, the system's limited functionality may reduce its effectiveness in addressing all aspects of smart farming. Bandara et al. [7] designed a smart farm system that leverages artificial intelligence (AI) to analyze real-time data and optimize production processes, thereby increasing system efficiency. However, the system's reliance on stable internet connectivity may limit its applicability in remote areas with unstable networks. Jindarat et al. [8] utilized Raspberry Pi and Arduino platforms to create an affordable smart farm system enabling remote monitoring and control. While its cost-effectiveness and accessibility are strengths, the system requires users to have programming and hardware skills

to fully utilize its features, restricting its broader adoption. Zamora-Izquierdo et al. [9] developed an IoT platform that integrates edge and cloud computing, providing flexible, fast, and accurate data processing. Nevertheless, the relatively high costs of installation and maintenance may hinder widespread deployment. Jukan et al. [10] introduced a fog-to-cloud computing architecture for livestock farming, which reduces operational costs and enhances farm efficiency. Although scalable and capable of offloading central servers, the system demands significant technical expertise and continuous maintenance, limiting its accessibility for some users. Citoni et al. [11] proposed using LoRaWAN technology in smart agriculture, which is well suited for remote areas due to its energy efficiency and long-range communication. However, its limited data transmission capacity and inability to support real-time updates restrict its applicability in data-intensive farming scenarios. Finally, Ryu et al. [12] presented an IoT-connected smart farm system designed for ease of use and adaptability to various farm sizes. Despite its versatility, the high initial setup cost may deter adoption by small-scale farmers or those with constrained resources. Table 2 provides a summary of recent advances in IoT-enabled smart agriculture, highlighting key proposed frameworks and their respective references. These works span a wide range of approaches, including low-power IoT networks for efficient data collection, semantic frameworks to improve data integration and interoperability, and systems for traceability and real-time monitoring.

Table 2. Related works in IoT-enabled smart agriculture frameworks.

Proposed Framework	Reference
Low-power IoT networks for data collection	Heble et al. (2018)
Semantic frameworks and data integration	Kamilaris et al. (2016)
IoT based traceability and monitoring systems	Wongpatikaseree et al. (2018), Bandara et al. (2020)
Sensor networks for precision farming	Maha et al. (2019)
Affordable DIY monitoring solutions	Jindarat and Wuttidittachotti (2015)
Edge and cloud computing platforms	Zamora-Izquierdo et al. (2019), Jukan et al. (2019)
Long range IoT communication	Citoni et al. (2019)
Integrated connected farm systems	Ryu et al. (2015)

A persistent challenge in the development of IoT enabled agriculture systems is the integration of diverse sensors, communication protocols, and data formats. Although semantic frameworks are helping to mitigate these integration issues, seamless interoperability across heterogeneous platforms remains unresolved. Furthermore, even promising long-range communication technologies such as LoRaWAN face limitations due to connectivity constraints in many rural and remote regions. In these areas, inadequate infrastructure continues to impede the effectiveness and reliability of IoT-based farming solutions. The convergence of real time sensor networks with edge computing has transformed precision crop management, exemplified by systems like MongKaset and comparable technologies. These innovations enhance energy efficiency, enable real time control, and offer scalable solutions that provide farmers with significant productivity gains while minimizing resource use. Nonetheless, existing challenges related to system integration complexities, connectivity limitations in remote locations, and data security concerns require further attention. Future research should prioritize improving interoperability frameworks, expanding network connectivity especially in underserved regions, and strengthening data security measures. Addressing these challenges will accelerate the adoption and enhance the impact of smart agriculture

platforms, making them more accessible and effective in advancing global agricultural sustainability and productivity.

In Thailand and Southeast Asia, several studies have demonstrated the potential of IoT-based smart farming for agricultural monitoring and control. Muangprathub et al. [21] developed an IoT and wireless sensor network system for smart farming, focusing on field sensor nodes, crop watering control, and data management through smartphone and web applications. Their work showed the practical value of sensor-based irrigation and mobile monitoring in the Thai agricultural context. Similar research in Thailand has also explored smart farm design for orchard monitoring and automatic control, showing the feasibility of applying IoT technologies to agricultural environments [22]. More recent work has examined IoT-based smart farming usability for sustainable organic agriculture in Thailand, emphasizing that small-scale farmers still face challenges in manual soil monitoring, irrigation management, and access to practical technologies [23]. Despite these developments, several gaps remain. Many existing systems focus primarily on monitoring, mobile visualization, or single-function irrigation control. Fewer studies present a compact modular controller that integrates multi-sensor acquisition, lightweight edge-level preprocessing, local rule-based control, actuator operation, cloud synchronization, mobile configuration, field validation, and economic feasibility analysis within one deployable platform. Therefore, the MKU-1 system proposed in this study aims to address this gap by providing a practical modular smart farming controller for small- and medium-scale agricultural deployment in the EEC.

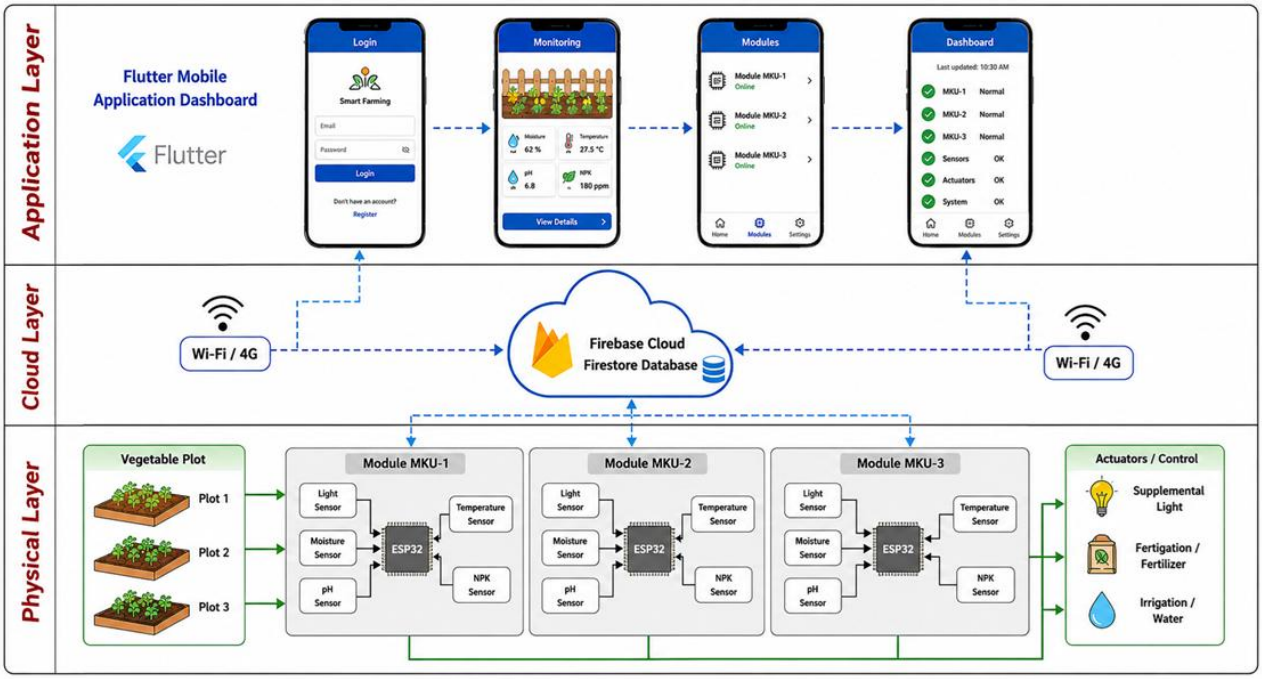

Figure 1. The proposed framework illustrating the flow of sensor data from physical sensors through cloud processing to the mobile application, enabling real-time monitoring and control

Therefore, in this paper, we proposed an IoT-driven smart agriculture system tailored to support Thai farmers and stakeholders engaged in medicinal herb cultivation, particularly focusing on chili pepper and holy basil in Thailand's EEC. The proposed system integrates a multi-sensor architecture to continuously monitor environmental and soil parameters essential for plant growth. In addition, the proposed system features three key subsystems designed to optimize plant growth as follows: 1)

an adaptive irrigation system, 2) a liquid fertilizer delivery system, and 3) a full-spectrum lighting system. These are governed by control logic embedded in a microcontroller and managed remotely through a mobile application interface. The application not only allows users to monitor sensor data remotely but also provides the capability to configure system parameters for customized growth conditions. User commands are transmitted to the microcontroller, which adjusts operation of the irrigation, fertilization, and lighting subsystems accordingly.

III. Materials and Methods

Proposed Framework

The proposed IoT-based smart agriculture framework is structured into three distinct layers, each responsible for specific functional components as illustrated in Figure 1.

1. Physical Layer: This layer comprises IoT sensors and edge devices that collect critical environmental data using communication protocols such as I²C, RS-485, and Modbus. The sensor suite includes the JXCT 7-in-1 sensor for measuring soil pH, fertility (NPK), soil moisture, soil temperature, and soil electrical conductivity; the BH1750 sensor for light intensity; and SHT31 sensor for ambient temperature and relative humidity. Data acquisition and processing are managed by NodeMCU ESP32 (WROOM32) unit, equipped with integrated antennas, Bluetooth module, and standard Wi-Fi connectivity to ensure robust local communication as shown in Fig. 2.
2. Cloud Layer: Data collected from the physical layer is transmitted to a cloud backend implemented with Firebase, providing real-time data monitoring, storage, and management capabilities. This cloud infrastructure supports scalability and facilitates remote access to sensor data.
3. Application Layer: The user-facing interface is delivered via a mobile application, developed using Flutter to enable cross-platform compatibility on both iOS and Android devices. The application provides an intuitive dashboard for real-time data visualization, system control, and configuration.

By providing immediate access to critical environmental and crop-related information, the system empowers growers to make timely, data-driven decisions. As a result, it enhances cultivation practices, increases productivity, and ensures high-quality yields that align with market requirements. In addition, the system incorporates a USB modem 4G Wi-Fi hotspot to function as a wireless access point for the ESP32. Sensor data are transmitted to a cloud server for further processing and storage. This information is subsequently delivered to a smartphone application or other user interfaces, enabling farmers to monitor and manage cultivation conditions in real time, regardless of location.

To quantitatively evaluate the operational performance of the MKU-1 platform, five system-level indicators were considered: data completeness, system uptime, cloud transmission success rate, response latency, and power consumption. Data completeness was calculated as the ratio between the number of valid records received in the cloud database and the expected number of records based on the sampling interval. System uptime represented the percentage of time that the MKU-1 unit remained operational during the field experiment. Cloud transmission success rate was defined as the ratio of successfully uploaded records to the total number of attempted transmissions. Response latency was measured as the time delay between sensor acquisition and data availability in the mobile application. Power consumption was estimated from the operating voltage and current consumption of the controller, sensors, communication module, and relay circuit. These indicators

provide practical evidence of system reliability beyond crop growth performance. In particular, data completeness and transmission success rate reflect the stability of real-time monitoring, while response latency indicates the suitability of the system for near-real-time decision-making in irrigation, fertigation, and lighting control.

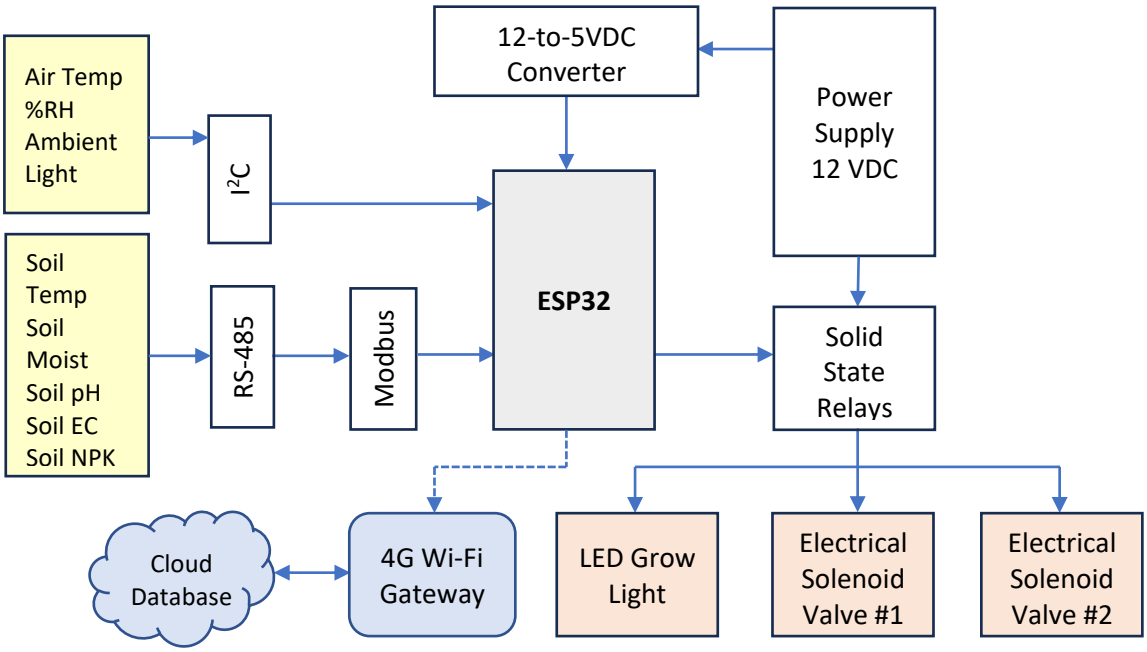

Figure 2. The hardware architecture of the proposed MKU-1 sensor network and edge computing system designed for precision crop management in this study

This research developed and designed a prototype modular unit, referred to as MKU-1, which integrates various components for automated cultivation management. The MKU-1 module employs an ESP32 microcontroller as the primary processing unit, interfacing with five sensors installed inside the enclosure. These sensors work in coordination to collect data and control multiple systems within the cultivation plot, as illustrated in Fig. 2. The main features of the MKU-1 system are as follows:

1. Power Supply: The MKU-1 is powered by a 12 V DC source, which is regulated down to 5 V DC using an LM2596 step-down converter. This regulated voltage supplies power to the sensors and other electronic components inside the module.
2. Solid State Relay (SSR): A 12 V SSR is integrated into the system, functioning as a switch for automated subsystems such as irrigation and liquid fertilizer control. The SSR enables precise and rapid switching operations.
3. Water and Fertilizer Control: Flow regulation of water and liquid fertilizer is achieved using 12 VDC electrical solenoid valves. These valves operate through an electromagnetic coil mechanism, which perform ON/OFF operations to open and close the flow channel automatically when energized.

4. Lighting System: For supplemental lighting, the MKU-1 employs a full-spectrum LED grow light, which provides high-efficiency lighting suitable for controlled cultivation environments.

Each MKU-1 module is designed to cover a cultivation area of 2 m × 6 m, equivalent to 12 m². This configuration ensures optimal coverage and precise environmental control across the designated plot. The MKU-1 system has been specifically developed to meet the practical needs of farmers by integrating modern technology for fully automated operation and real-time monitoring. As a result, the system enhances production efficiency and optimizes resource management within herbal crop cultivation. The system is currently deployed and operational at the Kasetsantirat Community Enterprise, located at 159/5 Nawanghin Subdistrict, Phanat Nikhom District, Chonburi Province, 20140, Thailand.

Figure 3. The experimental site for system installation and the prototype developed and implemented in this paper

Sensor data were acquired at a sampling interval of 300 seconds per acquisition. The sampling interval was configurable within a range of 5 to 30 minutes depending on crop type, experimental condition, and monitoring requirement. Each data record consisted of a timestamp, device identifier, plot identifier, crop type, environmental parameters, soil parameters, and actuator status. Before data transmission, the MKU-1 edge unit performed basic validation by checking whether each sensor reading was within the measurable range defined in Table 3. Out-of-range values were flagged as invalid and excluded from automatic control decisions. In cases of temporary communication failure, missing records were identified based on timestamp discontinuity. Short missing intervals were marked in the database and treated as missing values during offline analysis, while longer gaps were excluded from model training and statistical evaluation. For visualization purposes, daily and weekly trends were generated using valid timestamped records only. The cloud database was organized according to device ID, plot ID, date, and timestamp, allowing efficient retrieval of historical data through the mobile application and export to CSV format for further analysis. The controlled output variables include irrigation volume, liquid bio-agent application, and supplemental lighting. Control of irrigation and liquid bio-agent application is executed through actuators that regulate fluid flow via electrically operated solenoid valves. These solenoid valves operate using a 12 VDC supply voltage and function in an on-off manner to control water and bio-agent delivery according to predefined conditions. Supplemental lighting control is implemented via an Inter-Integrated Circuit (I2C) communication interface, which allows adjustment of color composition

and brightness levels. The proposed algorithm is designed for real-time dataset processing as the main computing unit. Sensor data are acquired and processed through several key stages, including:

- Feature Selection, which identifies the most influential variables affecting plant growth.
- Optimal Control Parameter Determination, which determines the optimal balance of irrigation, fertilization, and lighting conditions.
- Automated Decision-Making, where the analytical results are used to automatically control output devices via an ESP32 microcontroller.

This processing framework enables intelligent and adaptive control in a smart agriculture environment.

Table 3. Environmental Variables Collected by the System [13], [14], [15]

No.	Parameter	Measurement Range	Unit	Sensor Device
1	Air temperature	-40 to 125	°C	SHT31
2	Relative humidity	0 to 100	%	
3	Light intensity	1 to 65,535	Lux	BH1750
4	Soil moisture	0 to 100	%	JXCT 7-in-1 Sensor
5	Soil temperature	-40 to 80	°C	
6	Soil electrical conductivity	0 to 10,000	µS/cm	
7	Soil pH	3.0 to 9.0	pH	
8	Nitrogen (N)	0 to 2,000	mg/L	
9	Phosphorus (P)	0 to 2,000	mg/L	
10	Potassium (K)	0 to 2,000	mg/L	

Table 3 presents the measurement ranges of the sensors used for monitoring environmental variables in the smart agriculture monitoring and control system. Each row specifies the parameter name, measurement range, unit, and sensor device employed. Parameters 1 and 2 represent air temperature and relative humidity, which are measured using the SHT31 sensor. This sensor supports an air temperature range from −40 to 125 °C and relative humidity from 0 to 100%. Parameter 3 measures light intensity using the BH1750 sensor, with a measurement range of 1 to 65,535 lux. Parameters 4 to 10 are obtained from an integrated soil sensing unit, the JXCT 7-in-1 sensor. This configuration enabled comparative analysis between conventional cultivation practices and system-assisted cultivation. A total of ten environmental variables were monitored in the cultivation plots, including:

- Air temperature – measuring the ambient atmospheric temperature
- Relative humidity – measuring atmospheric moisture affecting plant transpiration
- Light intensity – measuring the amount of light received by plants, which influences photosynthesis
- Soil temperature – monitoring soil thermal conditions affecting root development
- Soil moisture – measuring soil water content for irrigation control
- Soil pH – assessing soil acidity or alkalinity, which affects nutrient availability
- Soil electrical conductivity (EC) – indicating dissolved salt concentration and soil quality
- Soil nitrogen (N) – an essential nutrient promoting vegetative growth
- Soil phosphorus (P) – a key nutrient supporting root development and flowering
- Soil potassium (K) – enhancing plant strength and disease resistance

Figure 4 illustrates an example of the actual cloud database structure used in the proposed system. Sensor records were stored as timestamped entries under each device and plot identifier. Each entry contained environmental variables, soil variables, and actuator status. This structure enables real-time visualization through the mobile application and historical retrieval for daily, weekly, or seasonal analysis. To demonstrate practical data storage and retrieval, one week of sensor records was extracted from the cloud database and summarized as daily trends. The example confirms that the proposed system can continuously collect and store environmental data in a structured format suitable for real-time monitoring, decision support, and offline machine learning analysis.

ID	Sensor	Location	Temp (C)	Humidity (%)	Light (Lux)	Soil Moisture (%)	Soil Temp (C)	Soil EC (uS/cm)	Soil pH	Soil N (mg/kg)	Soil P (mg/kg)	Soil K (mg/kg)	Date/Time	LED	SV1 (WT)	SV2 (LF)
17296	F-11	SMP Farm	48.20	37.55	2175.00	92.50	47.50	219	4.75	219	24	208	2023-11-15 12:34:19	0	0	0
17295	F-15	SMP Farm	47.34	44.67	7027.50	41.60	64.80	136	6.48	95	95	8	2023-11-15 12:34:02	0	0	0
17294	F-06	SMP Farm	43.16	46.12	6576.67	48.60	41.10	155	4.11	184	140	41	2023-11-15 12:32:12	0	0	0
17293	F-10	SMP Farm	42.71	44.91	6842.50	69.00	42.90	120	6.61	57	57	57	2023-11-15 12:30:22	0	0	0
17292	F-12	SMP Farm	50.87	40.67	7660.00	41.60	3519.20	71	6.64	71	71	17	2023-11-15 12:30:17	0	0	0

Figure 4. Example of the Firebase cloud database structure and timestamped sensor records collected from the MKU-1 system during field deployment

IV. Experimental Results of Chili Pepper Cultivation

To evaluate the performance of the proposed system in controlling irrigation, fertilization, and lighting for chili pepper cultivation, an experimental study was conducted to examine the relationship between sensor data (temperature, soil moisture, fertilizer-related parameters, and light intensity) and chili plant growth. The experiment employed chili pepper (*Capsicum annuum*), specifically the *Prik Chee Fah* variety, which is characterized by elongated fruits, moderate pungency, and widespread culinary use. Chili peppers were cultivated in field plots with a plant spacing of 50 cm and a row spacing of 1 m. The cultivation area was divided into two groups, i.e., a system-assisted group (using the smart agriculture system), and a non-system group (without system assistance). Environmental conditions of both groups were monitored using sensors measuring air temperature, soil moisture, light intensity, soil pH, and fertilizer-related parameters. For the system-assisted group, irrigation and fertilization were automatically controlled based on predefined threshold values configured in the application. Plant growth parameters, including plant height, yield quantity, and fruit quality, were periodically observed. Sensor data were recorded at 30-minute intervals. Growth performance between the two groups was compared over the experimental period.

V. Experimental Results of Holy Basil Cultivation

To evaluate the effectiveness of the proposed system in controlling environmental conditions to promote holy basil growth, and to investigate the effects of light and irrigation control on plant development, an experimental study was conducted using red holy basil (*Ocimum tenuiflorum*). Red holy basil is characterized by dark red stems and leaves, a distinctive aroma, and a spicier flavor compared to white holy basil. It is widely used in culinary applications, particularly in stir-fried basil dishes. Holy basil was cultivated in field plots with plant spacing of 30–50 cm and row spacing of 50–70 cm. The cultivation area was divided into two groups, i.e., a system-assisted group and a non-

system group. Environmental conditions were monitored using sensors measuring air temperature, soil moisture, light intensity, and soil pH. The system-assisted group received automated irrigation and artificial lighting based on predefined control conditions, whereas the non-system group relied on conventional manual management without automated control. The non-system plot was not left unmanaged. It followed conventional local farmer practice. Manual irrigation was conducted once per day in the morning between 07:00 and 09:00 under normal conditions. During hot and dry periods, irrigation was increased to twice per day, in the morning between 07:00 and 09:00 and in the late afternoon between 16:00 and 18:00. During rainy periods, watering was reduced or skipped depending on visible soil wetness and rainfall. Fertilizer was applied manually. For chili pepper, organic manure was applied during soil preparation, followed by 15-15-15 fertilizer approximately 10-15 days after transplanting. For holy basil, 15-15-15 or 20-11-11 fertilizer was applied at approximately 30-50 kg/rai after each harvest. Weed removal and visual crop inspection were conducted regularly in both plots. Therefore, the comparison represents automated sensor-based management versus conventional farmer-based management, not a comparison with a neglected plot [19], [20]. Plant growth parameters, including plant height, number of leaves, leaf density, and overall growth performance, were periodically monitored. Growth outcomes between the two groups were compared to analyze differences resulting from environmental control.

Table 4. Comparison of Chili Pepper Cultivation Results

Week	System-assisted	Non-system	System-assisted	Non-system	System-assisted	Non-system	System-assisted	Non-system
	Average Plant Height (cm)		Soil Moisture (%)		Soil pH		Light Intensity (lux)	
Week 1	10	9	65	50	6.5	6.5	12,000	12,000
Week 2	18	15	70	45	6.4	6.2	12,500	11,500
Week 3	25	22	68	40	6.3	6	13,000	11,000
Week 4	32	27	72	35	6.2	5.8	12,800	10,500
Average (± SD)	21.25 ± 9.43	18.25 ± 7.89	68.75 ± 2.99	42.50 ± 6.45	6.35 ± 0.13	6.13 ± 0.30	12,575 ± 435	11,250 ± 645

Table 5. Comparison of Holy Basil Cultivation Results

Month/Year	Parameter	System-Assisted	Non-System
Mar 2024	Plant height (cm)	35	30
	Number of leaves	80	65
	Soil moisture (%)	70	50
	Soil pH	6.5	6.3
	Light intensity (lux)	13,000	11,500
Apr 2024	Plant height (cm)	45	40
	Number of leaves	100	80
	Soil moisture (%)	72	48
	Soil pH	6.4	6.2
	Light intensity (lux)	14,000	12,000
May 2024	Plant height (cm)	55	47
	Number of leaves	120	95
	Soil moisture (%)	75	50
	Soil pH	6.3	6.1
	Light intensity (lux)	14,500	12,500

Jun 2024	Plant height (cm)	60	55
	Number of leaves	130	110
	Soil moisture (%)	80	60
	Soil pH	6.4	6.3
	Light intensity (lux)	12,000	10,500
Jul 2024	Plant height (cm)	65	60
	Number of leaves	140	120
	Soil moisture (%)	82	62
	Soil pH	6.4	6.3
	Light intensity (lux)	11,500	10,000
Aug 2024	Plant height (cm)	70	65
	Number of leaves	150	125
	Soil moisture (%)	85	65
	Soil pH	6.3	6.2
	Light intensity (lux)	11,000	9,500
Sep 2024	Plant height (cm)	75	70
	Number of leaves	160	130
	Soil moisture (%)	85	68
	Soil pH	6.2	6.1
	Light intensity (lux)	10,500	9,000
Oct 2024	Plant height (cm)	80	72
	Number of leaves	170	135
	Soil moisture (%)	87	70
	Soil pH	6.2	6.1
	Light intensity (lux)	10,000	8,500
Nov 2024	Plant height (cm)	85	75
	Number of leaves	180	140
	Soil moisture (%)	70	55
	Soil pH	6.5	6.3
	Light intensity (lux)	9,000	8,000
Dec 2024	Plant height (cm)	90	80
	Number of leaves	190	150
	Soil moisture (%)	72	57
	Soil pH	6.4	6.2
	Light intensity (lux)	8,500	7,500
Jan 2025	Plant height (cm)	95	85
	Number of leaves	200	160
	Soil moisture (%)	74	60
	Soil pH	6.3	6.2
	Light intensity (lux)	8,000	7,000
Feb 2025	Plant height (cm)	100	88
	Number of leaves	210	165
	Soil moisture (%)	75	62
	Soil pH	6.2	6.1
	Light intensity (lux)	7,500	7,000

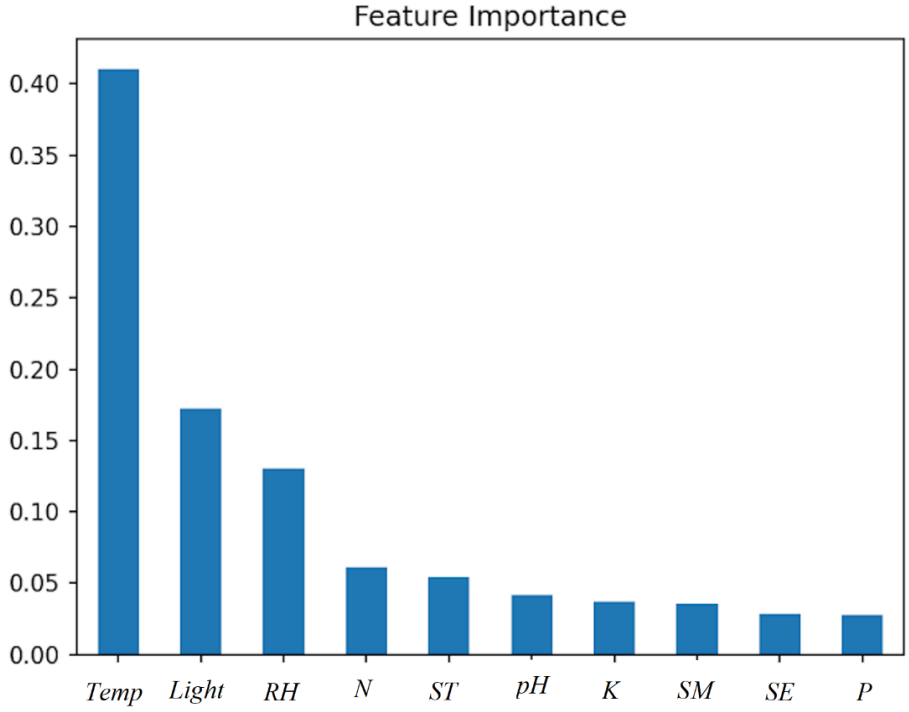

Figure 5. Results of the analysis of key influential variables affecting crop cultivation.

VI. Discussion of Results

As shown in Table 4, the system-assisted group consistently exhibited greater average plant height than the non-system group throughout the four-week observation period. The mean plant height of the system-assisted group was 21.25 ± 9.43 cm, compared to 18.25 ± 7.89 cm for the non-system group, indicating improved vegetative growth under automated environmental control. This enhancement can be attributed primarily to the more stable soil moisture conditions maintained by the automated irrigation system. The system-assisted group achieved a higher and more consistent soil moisture level (68.75 ± 2.99%) compared to the non-system group (42.50 ± 6.45%), which is critical for optimal water uptake and root development in chili pepper plants. In addition to soil moisture regulation, soil pH in the system-assisted group remained within a narrow and favorable range for chili pepper growth (6.35 ± 0.13), whereas the non-system group exhibited greater variability and a gradual decline in pH (6.13 ± 0.30). Maintaining stable soil pH is essential for nutrient availability and absorption, particularly for nitrogen and potassium, which are vital for vegetative growth and fruit development. Light intensity also showed improved stability in the system-assisted group, with an average value of 12,575 ± 435 lux, compared to 11,250 ± 645 lux in the non-system group. The reduced variability in light exposure supports more efficient photosynthesis and contributes to sustained plant growth, especially during periods of fluctuating natural light conditions. Overall, the combined effects of controlled irrigation, stabilized soil pH, and regulated light intensity resulted in superior growth performance in the system-assisted group. These findings demonstrate that the proposed smart agriculture system effectively maintains favorable environmental conditions, leading to enhanced cultivation efficiency and improved growth outcomes for chili pepper plants when compared with conventional, non-system-based cultivation practices.

As presented in Table 5, the results clearly demonstrate that the system-assisted group consistently outperformed the non-system group across all observed growth and environmental parameters throughout the entire cultivation period. From the early growth stage in March to the final observation in February, holy basil plants cultivated under system-assisted conditions exhibited greater plant height, a higher number of leaves, and more stable environmental conditions compared to those grown without system support. In terms of vegetative growth, the system-assisted group showed a steady and continuous increase in plant height over time. Plant height increased from 35 cm in March to 100 cm in February, whereas the non-system group increased from 30 cm to 88 cm during the same period. The consistently higher plant height observed in the system-assisted group reflects improved growth vigor and more favorable growing conditions, particularly during periods of seasonal environmental variability. Similar trends were observed in leaf production, where the number of leaves in the system-assisted group increased from 80 to 210 leaves, compared to 65 to 165 leaves in the non-system group. Since leaf number and density are directly associated with photosynthetic capacity, these results indicate enhanced biomass accumulation under controlled conditions. Controlled soil moisture played a critical role in supporting plant growth. Throughout most of the cultivation period, soil moisture levels in the system-assisted group were maintained within an optimal range of approximately 70–87%, while the non-system group exhibited lower and more fluctuating soil moisture values, particularly during drier months. Notably, during periods of environmental stress, such as late-season months, the system-assisted group maintained adequate moisture levels, preventing water stress and promoting sustained growth. In contrast, the non-system group experienced greater variability, which may have limited nutrient transport and root function. Soil pH stability further contributed to the improved performance of the system-assisted group. Across all months, soil pH in the system-assisted plots remained within a narrow and agronomically favorable range of 6.2–6.5, whereas the non-system group showed slightly lower and more variable pH values. Stable soil pH enhances nutrient availability, particularly for essential macronutrients such as nitrogen and potassium, which are vital for leaf development and overall plant health in holy basil. Light intensity regulation also played an important role in supporting consistent photosynthetic activity. While natural light availability declined seasonally from mid-year to early-year months, the system-assisted group maintained relatively stable light intensity levels through supplemental lighting. Light intensity in the system-assisted group gradually decreased from approximately 14,500 lux during peak sunlight periods to 7,500 lux in later months, whereas the non-system group experienced a sharper decline to 7,000 lux. The reduced variability in light exposure under system-assisted conditions likely contributed to sustained photosynthesis and prevented growth retardation during low-light seasons. Overall, the integrated control of irrigation, soil conditions, and light intensity resulted in significantly improved growth performance of holy basil plants. The system-assisted cultivation consistently produced taller plants with a higher number of leaves and demonstrated greater resilience to seasonal environmental fluctuations. These findings confirm that the proposed environmental control system effectively enhances holy basil growth and cultivation efficiency, making it a reliable solution for year-round production under varying climatic conditions.

In Fig. 5, the analysis of influential variables reveals that the proposed system is capable of accurately identifying key environmental factors affecting crop yield. Based on the experimental results, the system achieved an overall analysis accuracy of 96.55%, demonstrating high reliability in evaluating the relationships between environmental variables and cultivation outcomes. Among the monitored environmental factors, air temperature was identified as the most influential variable, with a relative importance score of 0.41. This finding indicates that temperature plays a dominant role in regulating plant physiological processes, including metabolism, transpiration, and growth rate. The second most influential factor was light intensity (0.17), highlighting the critical role of

light availability in photosynthesis and biomass accumulation. The third most significant variable was relative humidity (0.13), which affects plant water balance and transpiration efficiency. The ranking of these variables reflects their probabilistic importance derived from the model and suggests that precise control of temperature, light intensity, and humidity is essential for optimizing cultivation performance. The results confirm that the developed system can effectively extract meaningful insights from sensor data and prioritize environmental parameters that have the greatest impact on crop yield.

The experimental results indicate that the use of a smart agriculture system enables precise control and optimization of environmental conditions for chili pepper cultivation. Plants grown under system-assisted conditions exhibited improved growth performance and higher productivity compared to those cultivated without the system. In contrast, non-system cultivation was more susceptible to environmental variability, which occasionally exposed plants to suboptimal conditions. The implementation of smart agriculture systems offers several advantages such as

- Reduced water consumption through precise irrigation based on plant requirements
- Lower labor costs by minimizing manual intervention in irrigation control
- Improved production efficiency, resulting in higher yield and crop quality
- Enhanced adaptability to climate variability through rapid system response
- Remote monitoring and control via smartphones or computers

Moreover, field testing indicated that remote areas lacking reliable internet connectivity or electricity may not be suitable for this system. Alternative communication technologies, such as LoRaWAN or long-range radio-frequency wireless networks, may be considered for such environments. Additionally, the system may require regular maintenance, including sensor cleaning and fault diagnosis [16]. Users must also possess basic data analysis skills to interpret system outputs and optimize irrigation and fertigation strategies. While smart agriculture systems require initial investment and ongoing maintenance costs, they offer significant long-term benefits in terms of cost reduction and productivity improvement. Careful evaluation of installation costs, operational expenses, site suitability, and user expertise is essential. When implemented appropriately, the system supports sustainable and efficient agricultural practices.

Based on the cost analysis for a 10-rai cultivation area, the total fixed cost for system installation and equipment is THB 200,000. The annual variable costs consist of THB 10,000 for energy consumption and THB 5,000 for system maintenance, resulting in a total operational cost of THB 15,000 per year. In contrast, the system provides substantial annual economic benefits, including THB 20,000 in water cost savings, THB 15,000 in labor cost reduction, and an additional THB 30,000 in revenue generated from increased crop yield. The total annual benefit is therefore estimated at THB 65,000 per year. When comparing annual benefits to operational costs, the net annual gain is approximately THB 50,000, indicating that the smart agriculture system can effectively offset its operational expenses. Considering the initial investment, the estimated payback period is approximately four years, after which the system is expected to generate sustained economic returns. These findings suggest that the proposed system is economically viable and suitable for long-term deployment in medium-scale agricultural operations, supporting both productivity improvement and cost efficiency.

Table 6. Comparison of Experimental Results Between System-Assisted and Non-System Cultivation.

Environmental Variable	System-Assisted Cultivation	Non-System Cultivation
Soil moisture	Smart agriculture system maintains stable and optimal soil moisture levels, ensuring adequate water supply and promoting plant growth.	Soil moisture shows higher variability due to irregular or insufficient irrigation, potentially causing water stress.
Soil pH	Continuous monitoring and adjustment maintain soil pH within an optimal range for nutrient absorption and plant growth.	Soil pH is not consistently controlled and may become too acidic or alkaline, affecting nutrient uptake.
Light intensity	Adjustable LED lighting provides appropriate and consistent light intensity according to plant growth stages.	Light intensity depends on natural conditions such as weather and daylight duration, leading to variability.
Water and fertilizer management	Precise irrigation and fertigation based on sensor data ensure optimal water and nutrient delivery.	Water and fertilizer application relies on manual practices, which may result in inconsistencies or human error.
Overall environmental control	Continuous monitoring and automated control allow stable and optimized growing conditions.	Environmental conditions are difficult to regulate and may fluctuate significantly.

VII. Return on Investment (ROI)

The ROI [17] is calculated as the ratio of net annual profit to the initial investment defined by

$$\text{ROI} = \frac{\text{Net Annual Cash Flow}}{\text{Initial Investment}} \times 100$$

Substituting the values

$$\text{ROI} = \frac{50{,}000}{200{,}000} \times 100 = 25\%$$

This result indicates that the system generates approximately 25% return per year, demonstrating strong economic performance for medium-scale agricultural deployment.

VIII. Net Present Value (NPV)

The NPV [18] was calculated assuming a 5% annual discount rate and a 5-year system lifetime, which is a common assumption for agricultural IoT infrastructure defined by

$$\text{NPV} = -200{,}000 + \sum_{t=1}^{5} \frac{50{,}000}{(1+0.05)^t}$$

The resulting NPV is approximately THB 16,474, which is positive, indicating that the investment is financially viable over the evaluated period. A positive NPV combined with a relatively high ROI confirms that the proposed smart agriculture system is economically attractive. The estimated payback period of approximately four years further supports its feasibility. After reaching the break-even point, the system is expected to generate sustained economic benefits, making it suitable for long-term implementation in precision agriculture applications.

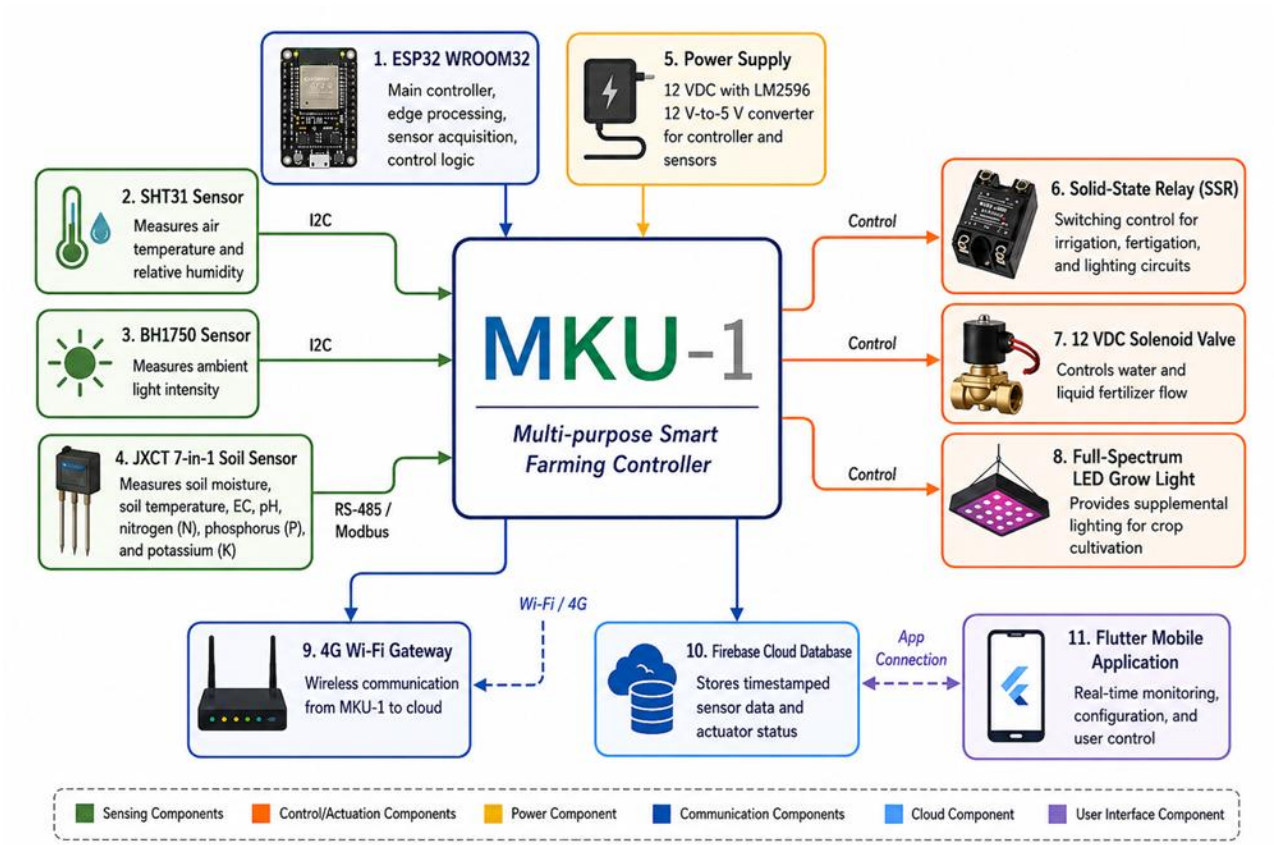

Figure 6. Main hardware components and functions of the MKU-1 platform.

Table 7. Comparison between existing IoT smart farming systems and the proposed MKU-1.

Study / System	Edge processing	Automated control	Cloud database	Field validation
Heble et al.	Limited	No	Limited	Limited
Kamilaris et al.	Partial	No	Yes	Not hardware-focused
Wongpatikaseree et al.	No	No	Yes	Application-focused
Jindarat and Wuttidittachotti	Partial	Partial	Limited	Prototype-level

Zamora-Izquierdo et al.	Yes	Partial	Yes	Yes
Citoni et al.	Limited	No	Possible	Yes
Proposed MKU-1	**Yes**	**Yes, irrigation, fertigation, lighting**	**Yes, Firebase**	**Yes, system vs. non-system plots**

Although the proposed MKU-1 system demonstrated effective real-time monitoring and environmental control, several limitations should be acknowledged. First, the field experiment was conducted within a limited cultivation area, where each MKU-1 unit was designed to cover approximately 2m×6m. Therefore, further validation is required under larger-scale and more diverse field conditions to confirm system robustness and scalability. Second, the current implementation relies primarily on 4G/Wi-Fi connectivity for cloud data transmission. In remote agricultural areas with unstable internet coverage, data transmission may be interrupted. Alternative communication technologies, such as LoRaWAN, long-range radio-frequency modules, or hybrid edge-cloud synchronization, should be considered in future deployments. Third, sensor accuracy may be affected by long-term exposure to soil, water, fertilizer, and outdoor environmental conditions. Regular sensor calibration, cleaning, and fault detection are therefore necessary for reliable operation. Fourth, although the MKU-1 system supports modular expansion, large-scale deployment across multiple rai requires careful planning of node placement, power supply, communication range, and database management. Future work will focus on extending the system to a multi-node sensor network, integrating low-power communication protocols, adding solar-powered operation, and improving edge-based decision-making using predictive machine learning models. In addition, future studies should evaluate the system across different crop types, seasons, and farm sizes to further validate its generalizability and economic feasibility.

Compared with existing IoT-based smart farming systems, the proposed MKU-1 platform provides several distinctive contributions as shown in Table 7. Previous studies have mainly focused on individual functions such as soil moisture monitoring, low-power data collection, cloud-based monitoring, or general IoT traceability. In contrast, the proposed system integrates real-time sensor acquisition, edge-level decision-making, cloud database storage, mobile application monitoring, and automated control of irrigation, fertigation, and supplemental lighting within a single modular hardware platform. In Fig. 6, the MKU-1 hardware platform is presented as the core edge-computing unit of the proposed smart farming system. It was designed as a modular and field-deployable control box that integrates sensing, communication, data processing, and actuator control in a single unit. The platform uses an ESP32 microcontroller as the main processing unit because of its low cost, Wi-Fi capability, low power consumption, and sufficient computational capacity for real-time sensor acquisition and control logic execution. The MKU-1 unit receives environmental and soil data from multiple sensors through I^2C, RS-485, and Modbus interfaces. The monitored variables include air temperature, relative humidity, light intensity, soil moisture, soil temperature, soil electrical conductivity, soil pH, and NPK nutrient levels. The collected data are processed locally at the edge device before being transmitted to the Firebase cloud database through a 4G Wi-Fi gateway. For the control function, the MKU-1 platform drives solid-state relays and 12 VDC solenoid valves to regulate irrigation and liquid fertilizer delivery. It also controls supplemental full-spectrum LED

grow lighting according to predefined operating conditions. This design allows the system to perform closed-loop environmental control without requiring continuous manual operation.

Table 8. Functional separation between edge node and cloud layer.

Function	MKU-1 edge node, ESP32	Firebase cloud database / application
Sensor acquisition	Yes	No
Timestamp assignment	Yes	Stored after upload
Sensor range validation	Yes	Used for historical checking
Missing-reading detection	Basic local detection	Historical data gap analysis
Threshold-based decision-making	Yes	Configuration storage
Irrigation control	Yes	User monitoring and parameter setting
Fertigation control	Yes	User monitoring and parameter setting
Lighting control	Yes	User monitoring and parameter setting
Temporary operation during network delay	Yes	No
Long-term data storage	Limited	Yes
Dashboard visualization	No	Yes
Historical data retrieval	No	Yes
Feature-importance analysis	No	Offline/cloud-level analysis
Heavy AI/ML inference	Not implemented in current prototype	Future work

In Table 8, the term edge computing refers to lightweight data processing and autonomous control performed locally at the field-deployed MKU-1 unit before data are transmitted to the cloud database. The MKU-1 platform uses an ESP32 microcontroller as the main edge node. The proposed architecture differs from a cloud-only monitoring system because control decisions do not depend on round-trip communication with the cloud. For example, when soil moisture falls below a predefined threshold, the MKU-1 unit can activate the solenoid valve locally without waiting for a command from the Firebase database or mobile application. Similarly, lighting and fertigation commands can be executed locally according to predefined control parameters stored in the microcontroller. This local execution reduces response delay and improves system robustness under unstable network conditions. However, the current prototype does not execute complex AI or

machine-learning inference directly on the ESP32. Feature-importance analysis and analytical model evaluation are performed offline using the collected dataset. Therefore, the MKU-1 platform is described as a lightweight edge-computing platform for real-time local preprocessing and control, rather than as a high-performance AI inference device.

IX. Conclusion

This paper presented the design, implementation, and evaluation of an integrated smart agriculture system based on the MKU-1 hardware platform and an application-based software interface. The MKU-1 hardware system can collect environmental data from multiple sensors and store the acquired information in a centralized database. These data are subsequently used to define and execute control conditions for plant growth regulation through three primary subsystems: irrigation, fertigation, and lighting. System control parameters are specified by users through a dedicated application. User-defined inputs are stored in the database and processed by an embedded microcontroller, which autonomously executes control commands to operate the corresponding subsystems. This architecture enables real-time monitoring, automated environmental control, and adaptive decision-making, which are essential for optimizing plant growth under varying agricultural conditions. The software component was developed as an application to support real-time monitoring, visualization, and system control. Sensor data are retrieved from the database and presented to users in an intuitive format, while bidirectional communication allows users to configure and control irrigation, fertigation, and lighting systems. System testing confirmed reliable data transmission, accurate real-time monitoring, and stable system operation, demonstrating the readiness of the MKU-1 platform for practical agricultural deployment. Comparative experimental results between system-assisted cultivation and non-system cultivation demonstrated that the proposed system significantly improves plant growth performance and cultivation efficiency. System-assisted cultivation consistently achieved superior outcomes due to controlled soil moisture, stable soil pH, regulated light intensity, and precise water and nutrient management. In contrast, non-system cultivation exhibited higher environmental variability, which occasionally resulted in suboptimal growing conditions. The key differences between the two approaches are summarized in Table 6, highlighting the advantages of automated environmental control.

From an economic perspective, the proposed system demonstrates clear potential to support economic development within the EEC. Cost analysis for a representative 10-rai cultivation area indicates that the system can reduce water and labor costs while increasing crop yield, resulting in a positive annual net cash flow and an estimated payback period of approximately four years. The calculated ROI of 25% and positive NPV further confirm the financial feasibility of the system. These economic benefits align with the EEC's strategic objectives of promoting technology-driven agriculture, resource efficiency, and sustainable rural income growth. From the cost perspective, the estimated initial investment was THB 200,000 for a 10-rai cultivation area, equivalent to approximately THB 20,000/rai. The annual operating cost was estimated at THB 15,000 for 10 rai, or THB 1,500/rai/year. The estimated annual net economic gain was THB 50,000 for 10 rai, equivalent to THB 5,000/rai/year. These values indicate that the MKU-1 system is economically feasible for medium-scale deployment, but cost reduction will be important for wider adoption by small-scale farmers.

Future work will improve the MKU-1 module in three directions. First, the durability of the enclosure and connectors will be evaluated under long-term outdoor exposure, including humidity, heat, dust, and water splash conditions. Second, energy management will be improved by measuring real operating current under sensing, communication, idle, and actuator-switching states, followed

by low-power firmware optimization and possible solar-powered operation. Third, the sensor interface will be extended to support plug-and-play sensor replacement, automatic sensor identification, and calibration management. These improvements will further strengthen the MKU-1 platform as a flexible and scalable smart farming controller.

APPENDIX

In this experiment, the cultivation modes are defined as follows:

- *System-assisted cultivation* refers to agricultural practices conducted under automated control of irrigation, fertilization, and lighting throughout all seasons. Environmental conditions are continuously monitored using sensors, and control actions are executed automatically to maintain optimal growing conditions for plant development.
- *Non-system cultivation* refers to conventional agricultural practices performed without automated environmental control. Plant growth under this mode depends primarily on natural seasonal conditions and manual management, which may result in greater variability in environmental factors affecting plant growth.

These definitions are applied consistently throughout the experimental design, data analysis, and comparative evaluation presented in this paper.

ACKNOWLEDGMENT

This research project was supported by Kasetsart University, Sriracha Campus, under Contract No. 03/2566, Fiscal Year B.E. 2566.

References

[1] Office of Agricultural Economics (OAE). (2023). *Thailand agricultural statistics*. Ministry of Agriculture and Cooperatives, Bangkok, Thailand.

[2] Eastern Economic Corridor of Innovation (EECi). (2025). *Innovation platforms in EEC: BIOPOLIS and advanced agriculture*. Rayong, Thailand.

[3] Heble, S., Kumar, S., & Sastry, R. V. (2018). *A low-power IoT network for smart agriculture* [Paper presentation]. IEEE International Conference on Smart Agriculture.

[4] Kamilaris, A., & Prenafeta-Boldú, F. X. (2016). *Agri-IoT: A semantic framework for Internet of Things-based smart farming*. Computers and Electronics in Agriculture, 125, 1–12.

[5] Wongpatikaseree, K., et al. (2018). *IoT-based traceability system for smart agriculture* [Paper presentation]. International Conference on Smart Agriculture.

[6] Maha, A., et al. (2019). *Wireless sensor networks for precision agriculture: A review*. Agriculture, 13(1).

[7] Bandara, H., et al. (2020). *Interoperable traceability in agrifood supply chains*. Sensors, 20(12).

[8] Jindarat, S., & Wuttidittachotti, P. (2015). *Smart farm monitoring using Raspberry Pi and Arduino* [Paper presentation]. International Conference on Internet of Things and Cloud Technologies (I4CT), Kuching, Malaysia.

[9] Zamora-Izquierdo, M. A., et al. (2019). *Smart farming IoT platform based on edge and cloud computing*. Biosystems Engineering, 177, 4–17.

[10] Jukan, K., et al. (2019). *A survey on the interplay between edge and cloud computing*. IEEE Communications Surveys & Tutorials, 21(4), 3593–3621.

[11] Citoni, P., et al. (2019). *Long range IoT communication for agriculture*. IEEE Sensors Conference.

[12] Ryu, D.-H., et al. (2015). *Developing ubiquitous sensor network platform using Internet of Things*. Journal of Sensors.

[13] Sensirion AG. (2022). *SHT31 humidity and temperature sensor datasheet*. Sensirion AG.

[14] ROHM Semiconductor. (2009). *Ambient light sensor (ALS) applications in portable electronics*. ROHM Semiconductor.

[15] Changsha Zoko Link Technology Co., Ltd. (2024). *7-in-1 integrated soil sensor datasheet*. Changsha Zoko Link Technology Co., Ltd.

[16] Phowong, S., Srichanpiyom, K., Puangploy, P., Euafua, C., & Phothisonothai, M. (2023). *A low-cost edge and cloud computing-based smart agriculture platform for lifecycle Andrographis paniculata planting* [Paper presentation]. ECTI Conference (ECTI-CON 2023).

[17] Botchkarev, A. (2015). *Estimating the Accuracy of the Return on Investment (ROI) Performance Evaluations*. Interdisciplinary Journal of Information, **10**, 217–233.

[18] Brealey, R., Myers, S., & Allen, F. (2020). *Principles of Corporate Finance*. McGraw-Hill Education.

[19] Office of Agricultural and Cooperatives, Amnat Charoen Province, Ministry of Agriculture and Cooperatives, "เรื่องง่ายๆ กับการปลูกพริกกินเองในบ้าน," 2021. [Online]. Available: https://www.opsmoac.go.th/amnatcharoen-local_wisdom-preview-431491791908. [Accessed: May 8, 2026].

[20] Department of Agricultural Extension, Ministry of Agriculture and Cooperatives, "เอกสารคำแนะนำเรื่องการปลูกพืชผักและไม้ดอก," 2015. [Online]. Available: https://esc.doae.go.th/wp-content/uploads/2015/02/veg%2Bflower.pdf. [Accessed: May 8, 2026].

[21] J. Muangprathub, N. Boonnam, S. Kajornkasirat, N. Lekbangpong, A. Wanichsombat, and P. Nillaor, "IoT and agriculture data analysis for smart farm," *Computers and Electronics in Agriculture*, vol. 156, pp. 467–474, 2019, doi: 10.1016/j.compag.2018.12.011.

[22] N. Phanthuna, "Design and application for a smart farm in Thailand," *Applied Mechanics and Materials*, vol. 866, pp. 433–436, 2017.

[23] A. Suttidee, P. Sriboonlue, S. Tongnamtiang, and V. Lakkham, "Assessing the usability of IoT-based smart farming for sustainable organic agriculture," *Journal of Computer Science*, vol. 21, no. 10, pp. 2337–2348, 2025.