Environment and Natural Resources Journal

Volume 24
Issue 3
2026

A Numerical Investigation of Perforated Inlet Baffle Configurations on Flow Behavior in a Rectangular Oil / Water Separator using CFD

Muna S. Resin[1*] and Haitham A. Hussein[2]

[1]*Department of Civil Engineering, Al-Nahrain University, Baghdad, Iraq*
[2]*Civil Engineering Department, College of Engineering, Al-Nahrain University, Baghdad, Iraq*

ARTICLE INFO

Received: 14 Aug 2025
Received in revised: 30 Dec 2025
Accepted: 19 Feb 2026
Published online: 13 Mar 2026
DOI: 10.32526/ennrj/24/20250221

Keywords:
CFD modeling/ FLOW-3D/ Oil-water separation/ Gravity separation tank/ perforated baffle

*** Corresponding author:**
E-mail:
munaa.mciv22@ced.nahrainuniv.edu.iq

ABSTRACT

Gravity separation tanks are generally utilized to separate water and oil in treatment applications. The operating behavior of such tanks is likely to be sensitive to tank operation, as these factors will largely determine whether or not oil droplets stratify easily and float independently of water. Within the present investigations, the influences of several holes in the baffles on water and oil separation within a rectangular tank were explored through the utilization of a numerical model and the consequent simulation of fluid flow. Moreover, in order to ensure the credibility of the simulations, validation was carried out through utilization of a model based on work already conducted experimentally. FLOW-3D (version 11.04) software was applied to model a steady-state, incompressible flow within a two-dimensional (x-z) domain using the Reynolds Averaged-Navier-Stokes (RANS) equations. The RNG k-ε turbulence model was adopted to approximate the hydraulic behavior, while the volume of fluid (VOF) approach was employed to capture the air-water interface. In addition, the FAVOR (Fractional Area/Volume Obstacle Representation) technique was used to represent the geometric details of the perforated baffles. 2 perforated baffle geometry cases were explored: differing in the number of holes but with the same hole diameter in both cases. Performance was strongly validated through operational uniformity based on the standard deviation of horizontal velocity within the tank, and the flow field pattern was utilized to determine the characterization of the streamlines and recirculation areas. A kinetic energy analysis was carried out to illustrate turbulence in the flow approximation. The results indicated that an inlet baffle with fewer holes had significantly enhanced operating uniformity and lower turbulence compared with more holes, and correspondingly, these flow field patterns depicted more streamlined movement and lower recirculation areas.

HIGHLIGHTS

A CFD model was used to analyze flow behavior in a rectangular gravity separator. 2 perforated inlet baffles with equal hole diameter were numerically investigated. The 2-hole baffle improved flow uniformity, flow field pattern and reduced kinetic energy. Improved hydraulic characteristics enhances droplet coalescence and oil-water separation. Results support optimizing a perforated baffle design for enhanced separator performance.

1. INTRODUCTION

Issues related to fats, oils, and greases (FOGs) in sewer infrastructure have generally not received adequate attention. However, from another perspective, these problems are part of the reasons for impediments and sewer discharges (Mattsson et al., 2014). FOG accumulation is the main contributor to sewer overflows, constituting 40%-50% of the total overflows. Nationally, the percentage of sewer overflows is between 10% and 25%, with about 138,000 sanitary sewer overflow (SSO) events annually due to the obstruction brought about by the solid, undissolvable FOG material clogging the sewers in the country (Jameel et al., 2011; Keener et al., 2008). The sources of these wastes include residues from refining and processing of petroleum and petrochemicals, as well as tramp oil generated in mechanical repair facilities and utility operations, among others

Citation: Resin MS, Hussein HA. A numerical investigation of perforated inlet baffle configurations on flow behavior in a rectangular oil / water separator using CFD. Environ. Nat. Resour. J. 2026;24(3):335-345. (https://doi.org/10.32526/ennrj/24/20250221)

(Southerland, 2002). Such challenges emphasize the urgency of developing reliable and efficient treatment and separation methods. Among the available techniques, gravity separation remains the most common and cost-effective method for removing dispersed oil droplets from wastewater in both municipal and industrial applications (Metcalf et al., 2014; Aziz, 2010). Hydrodynamic conditions such as velocity distribution, turbulence intensity, and internal tank configuration strongly influence the performance of gravity separators. This highlights the necessity for design enhancements to boost flow stability and separation efficiency (Hussein et al., 2013).

Equally, the separation of oil droplets from water is a basic operation used widely in industrial applications, especially within oil and gas industries. Moreover, this separation is crucial for separating free oil within products of water and for providing clean crude oil before processing or conversion into final products. Oil-water separators are essential equipment utilized within oil industries, and they help create efficiencies that lead to low oil transport expenses and meet all aspects of environmental regulations (Yu et al., 2017). Hafsi et al. (2020) performed a numerical simulation of two-phase flows through API-type separator systems. Their study aimed at investigating the oil droplets' coalescence phenomenon and optimizing their performances, while paying close attention to the essential role that CFD techniques play in optimizing industrial separator system performances.

Internal baffles have been widely recognized as effective and economical design features to improve the hydraulic performance of separation units (Akpan, 2013; Nascimento et al., 2024). For instance, Efendioglu et al. (2014) reported that perforated plates and optimized diverters enhanced the separation efficiency of an oil-gas separator to above 99% using ANSYS CFX simulations, while Al-Yacouby and Ahmed (2022) showed that perforated baffles were most effective in mitigating sloshing pressure in rectangular tanks. Ibrahim et al. (2024) performed a CFD simulation using Flow-3D software on a three-phase gravity separator for oil, gas, and water separation and showed that baffle design and number of perforations significantly and directly affected fluid distribution and separation, emphasizing that these could be optimized through CFD simulations for improved separator separation efficiency. These studies highlight the critical role of baffle configuration in controlling internal flow behavior.

Advancements in computational fluid dynamics (CFD) have further enabled detailed investigations of flow fields and separator performance using tools such as Flow-3D, Ansys Fluent, COMSOL Multiphysics, and others (Yusuf and Micovic, 2020). Recent studies confirm that perforated baffles contribute to reducing recirculation zones and promoting more uniform velocity distributions, which in turn enhance droplet coalescence and rise (Mee and Nor, 2011; Kim et al., 2025). In addition, hydrodynamic parameters such as kinetic energy (TKE) and velocity gradients have emerged as reliable indicators of separation efficiency. This advantage was also demonstrated by Joshy et al. (2022) in three-phase separators, where CFD was successfully applied to optimize internal baffles and perforated plates based on performance indicators such as KE, further confirming the relevance of CFD in design optimization.

Although inlet baffles are commonly used to improve hydraulic conditions in gravity separation tanks, most previous studies have either focused on solid baffles or have examined perforated designs without considering how the numbers of openings at a fixed diameter influences internal flow. As a result, the effect of perforation number on flow stability and separation performance is still not well defined. In this study, 2 perforated baffle configurations, 1 with 2 openings and another with 3 openings, each 6 cm in diameter, were evaluated numerically using FLOW-3D under single-phase (water-only) conditions. Flow uniformity, recirculation regions, and kinetic energy with a velocity profile were analyzed to assess how the number of openings affects the hydraulic behavior of the separator.

2. METHODOLOGY

2.1 Mathematical model

2.1.1 Equations of time-average flow

In the hydraulic numerical modeling, generally establish the flow conditions with the assumption of an incompressible, steady-state flow and consider the action of viscosity. The flow model of turbulence was employed in the estimation of the stresses of Reynolds and in the research of the tank of separation, assuming that the flow in the x and z coordinates was two-dimensional, while the mass continuity and the momentum equations are generally employed in the research of the governing equations (Hussein et al., 2013; Yakhot and Smith, 1992; Yakhot and Orszag, 1986; Hirt and Sicilian, 1985). The general mass continuity equation is:

$$V_f \frac{\partial \rho}{\partial t} + \frac{\partial}{\partial x}(\rho u A_x) + \frac{\partial}{\partial z}(\rho u A_z) = 0 \quad (1)$$

Here, ρ represents fluid density, u and w are velocity components along the x and Z directions, respectively, and V_f represents the volume fraction of fluid within a computational cell. The momentum equations, taking into account a region that becomes two-dimensional, are given:

$$\frac{\partial u}{\partial t} + \frac{1}{V_f}\{uA_x \frac{\partial u}{\partial x} + wA_Z \frac{\partial u}{\partial z} = -\frac{1}{\rho}\frac{\partial P}{\partial x} + G_x + f_x \quad (2)$$

$$\frac{\partial w}{\partial t} + \frac{1}{V_f}\left\{uA_x \frac{\partial w}{\partial x} + wA_Z \frac{\partial w}{\partial z}\right\} = -\frac{1}{\rho}\frac{\partial P}{\partial x} + G_z + f_z \quad (3)$$

Where; viscous acceleration terms are given by f_x and f_z, and gravitational accelerations are given by G_x and G_z. The dynamic viscosity μ is defined by the formulas below:

$$\rho V_f f_x = wsx - \left\{\frac{\partial}{\partial x}(A_x \tau_{xx}) + \frac{\partial}{\partial z}(A_z \tau_{xz})\right\} \quad (4)$$

$$\rho V_f f_z = wsz - \left\{\frac{\partial}{\partial x}(A_z \tau_{xz}) + \frac{\partial}{\partial z}(A_z \tau_{zz})\right\} \quad (5)$$

Where; $\tau_{xx} = -2\mu \frac{\partial u}{\partial x}$, $\tau_{zz} = -2\mu \frac{\partial w}{\partial x}$, $\tau_{xz} = -\mu\{\frac{\partial u}{\partial z} + \frac{\partial w}{\partial x}\}$

Where; wsx and wsz are wall shear stress values applied in their directions. The air-water free-surface interface was modeled by implementing the volume of fluids (VOF) method so that the time evolutions of the interface could be calculated accurately (Azimi and Shabanlou, 2018). The volume fraction evolution that governs the equation is

$$\frac{\partial F}{\partial t} + \frac{1}{V_f}\left\{\frac{\partial}{\partial x}(FA_x u) + \frac{\partial}{\partial z}(FA_z w)\right\} = 0 \quad (6)$$

The intricate internal geometry, such as hole-perforated baffles, was modeled using the Fractional Area/Volume Obstacle Representation (FAVOR) method. The method cleverly depicts solid boundaries using cell fractions as a function of porosity.

2.1.2 Turbulence model

The Renormalization Group (RNG) method is applicable to the governing equations of turbulence, utilizing difference equation methods to obtain both turbulent kinetic energy (k) and the turbulent dissipation rate (ε) (Selim et al., 2023; Adams and Rodi, 1990). The RNG method contains a statistical system with a systematic approach in identifying significant turbulent formulas, particularly those for turbulent kinetic energy and dissipation rate (ε). Further, mathematically modeled with eddy streamlining in tanks, this research presents insight that can be applied to a general situation relevant to a range of turbulence scales. Hence, RNG models have less dependency on a set of constant values obtained experimentally; hence, a unifying set of parameters emerges (Yakhot and Smith, 1992; Yakhot and Orszag, 1986). The RNG model demonstrates improved predicting capability regarding higher values, with functional shapes similar to those previously derived from standard models, hence allowing a comparative study regarding reasonable curvature and strain rate compared to a similar k-ε model. It's worth noting that the RNG model reproduces constant values previously derived by experimentation from a standard k-ε model. The modeling regarding turbulent kinetic energy (k), together with the relevant dissipation rate for a two-dimensional flow, is outlined as follows:

$$\frac{\partial k}{\partial t} + \frac{1}{Vf} + \left\{uAx\frac{\partial k}{\partial x} + uAz\frac{\partial k}{\partial z}\right\} = p + Diff - \mathcal{E} \quad (7)$$

$$\frac{\partial \mathcal{E}}{\partial t} + \frac{1}{Vf}\left\{uAx\frac{\partial \mathcal{E}}{\partial x} + uAz\frac{\partial \mathcal{E}}{\partial z}\right\} = C_{1\varepsilon}\frac{p\mathcal{E}}{k} + DDif - C_{2\varepsilon}\frac{\mathcal{E}^2}{k} \quad (8)$$

The most significant parameters considered under this study are the dissipation rate (ε), turbulent kinetic energy (k), gravitational acceleration (G), and pressure (P). The RNG model, as expressed by Yakhot and Orszag (1986), contains constants given by $C_{1\varepsilon}$=1.42, $C_{2\varepsilon}$=1.68, $C_{3\varepsilon}$=0.2.

2.2 Numerical model

In this work, computational simulations from the Navier-Stokes equations using the finite volume method (FVM) as given by Versteeg and Malalasekera (2007) provided the simulation of the steady-state, two-dimensional, incompressible flow. The simulation of the conservation of mass and momentum was done using viscous, pressure, and inertial terms. The FLOW-3D program employed the calculations by implementing the Volume of Fluid (VOF) technique included in it to simulate oil and water phase interfaces quite effectively (Hirt and Nichols, 1981). The technique is more effective at replicating multiphase flows and is widely used in separation studies because it successfully emulates the motion of the free surface. The RNG k-ε model has been utilized for the computational simulation of turbulent flow dynamics. The model is highly effective for the analysis of

detailed internal flow patterns and is widely adopted for simulating turbulent flow inside reservoirs. (Yakhot and Orszag, 1986; Hussein et al., 2013). Here, gravitational force is assumed to be the main responsible force of the separation process, whereas heat transfer and chemical reaction have usually been omitted with an assumption of incompressibility. It provides good representation of hydraulic performance as well as separation performance. It is in contrast with the specification of only general flow behavior, as it provides room for further evaluation of flow characteristics with hole arrangement geometries of varying natures with perforations. It can be utilized specifically for the purpose of evaluating the whole arrangement's effect on velocity distribution and kinetic energy distribution, as well as the flow uniformity of the separation tank.

2.2.1 Comparison test

The obtained results are consistent with the findings of both experimental and numerical investigations. Shahrokhi et al. (2012) constructed a physical model in the hydraulic laboratory to examine the flow characteristics within a rectangular tank, as shown in Figure 1. The experiments were performed in a tank measuring 200 cm in length, 50 cm in width, and 50 cm in height, with an inlet opening of 10 cm and a discharge rate of 0.002 m³/s.

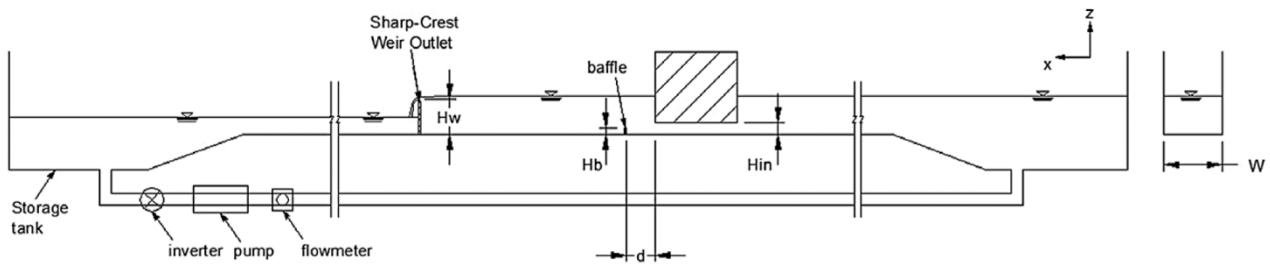

Figure 1. Schematic representation of the physical model of the rectangular tank (Shahrokhi et al., 2012).

The rectangular tank containing a single baffle was simulated in Flow-3D (v11.04) to replicate the experimental setup and define the computational domain, as illustrated in Figure 2(a). The model employed suitable boundary conditions, including a specified inlet velocity, a pressure-outflow boundary at the outlet, an open top surface, and no-slip conditions along the tank walls and bottom (Figure 2(b)). A structured mesh with a uniform cell size of 0.01 m was applied to achieve an optimal balance between computational efficiency and numerical accuracy, with aspect ratios evaluated to confirm mesh quality (Figure 2(c)-(d)).

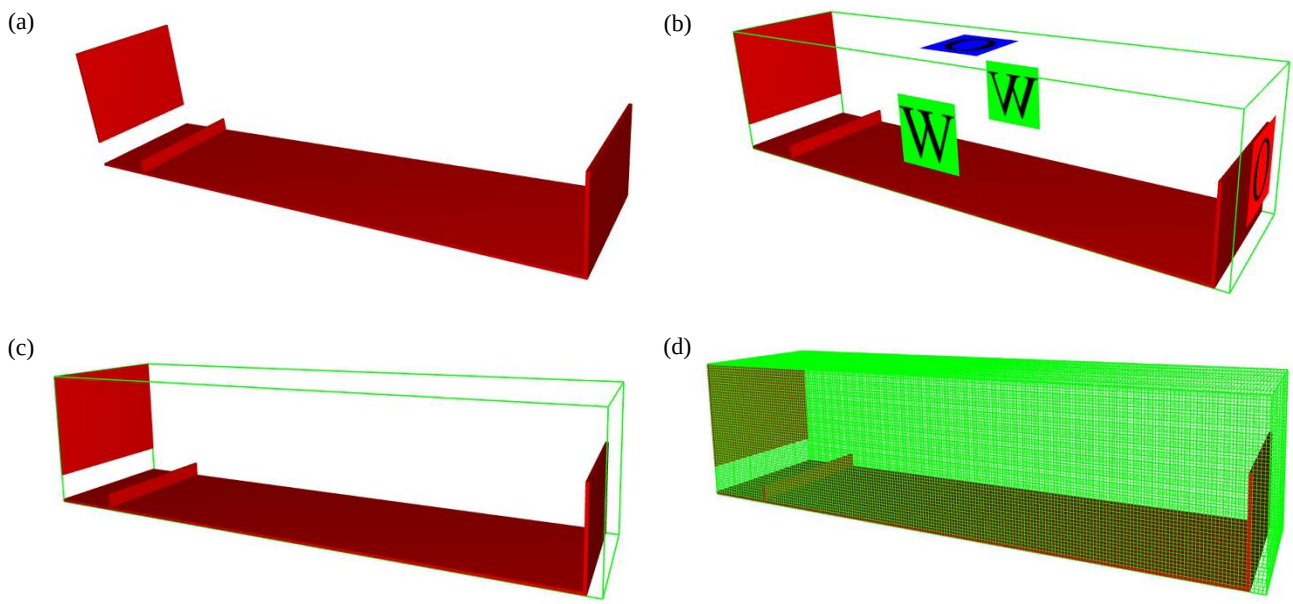

Figure 2. Numerical model: (a) model geometry, (b) boundary condition, (c) mesh block, (d) the computational cells

Velocity profiles were evaluated at three different set points, located 10, 46, and 82 cm away from the intake in the stream wise direction. As can be seen from Figure 3, by synchronizing the two sets of profiles with respect to inlet height (Z/H in) and horizontal velocity (U/U.), the results achieved by the model exhibited significant coincidence with experimental data. The numerical model effectively simulated velocity gradient in association with the general flow setup. A high correlation between numerical and experimental outcomes was noted, thus verifying the model, as can be seen from the statistical examination (R=0.98 and R^2=0.96).

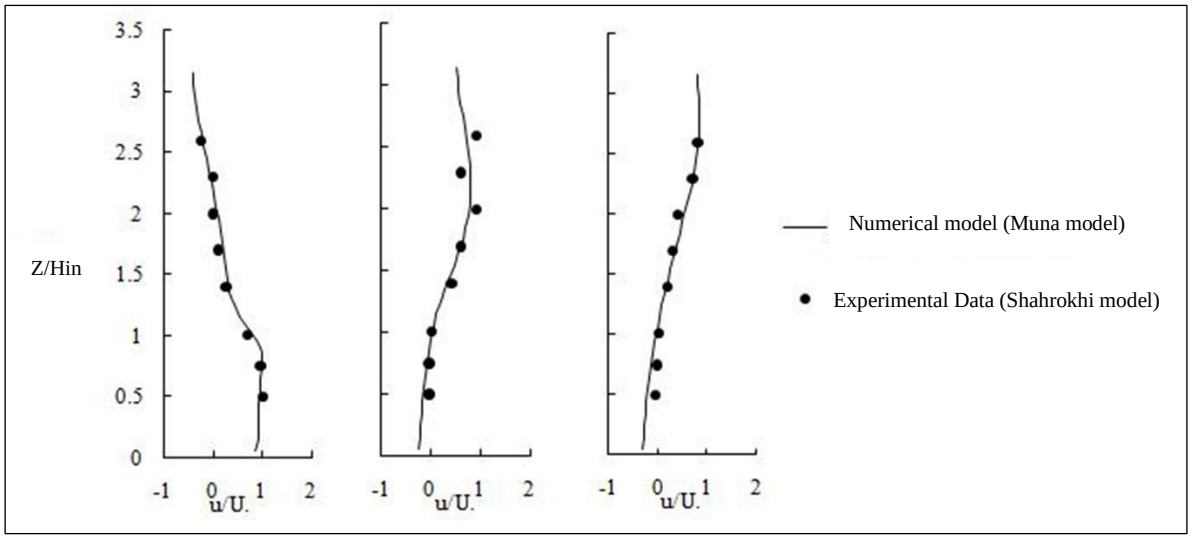

Figure 3. Comparison between numerical model and experimental data

2.2.2 Geometry generation

The separation tank was modeled in two dimensions to minimize computational requirements. As illustrated in Figure 4, the tank has a horizontal rectangular shape with a uniform depth of 0.5 m and an overall length of 2 m. The inlet was specified on the left vertical boundary, where a constant horizontal velocity of 0.04 m/s was applied, equivalent to a total discharge of 0.002 m^3/s. The outlet was defined on the right boundary at an elevation of 0.45 m above the tank bottom to allow the release of surface runoff.

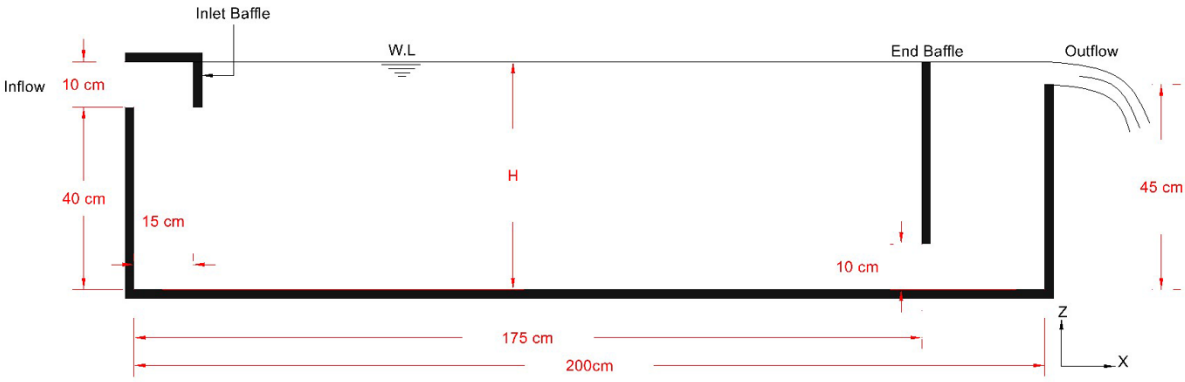

Figure 4. Longitudinal section for horizontal gravity separation tank (case study)

The tank geometry was modeled using the FLOW-3D platform, while the perforated baffles were created in AutoCAD and subsequently imported in STL format. The inlet baffle consisted of a vertical steel plate spanning the separator width (W=50 cm) and located at a depth of 0.40 m above bottom. The choice of a thickness of 10 mm ensured that it remained stable. Two baffle arrangements were considered, having 2 and then 3 circular holes (diameter of 6 cm) that helped reduce the jet inlet and

hence improve the velocity distribution. The baffle placement of 0.15 m away from the inlet kept the inlet flow steady into the separation region, as shown in Figure 5 below.

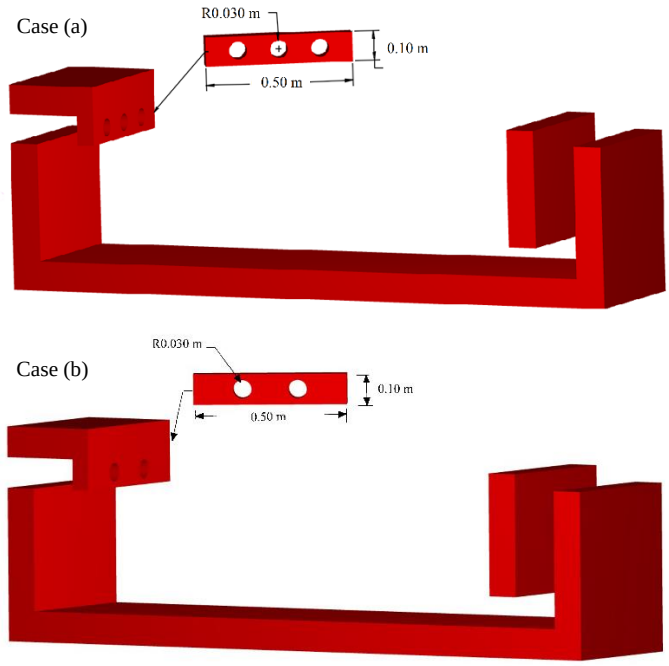

Figure 5. Displays 3D models of a rectangular gravity separator tank, illustrating the inlet perforated baffles: (a) the baffle with 3 openings, and (b) the baffle with 2 openings

Flow-3D models are capable of simulating the behavior of multiphase and turbulent flows using physical models. The model that I used includes the solution of the basic equations using Cartesian coordinates, while the gravity vector is set to the negative z-direction. The standard water property model includes a density of 1,000 kg/m³ and a viscosity of 0.001 Pa·s at 20°C, which corresponds to the SI units system of measurement (Sadiq et al., 2025). The model I employed integrated the RNG k-ε model, which effectively simulates the dynamics of turbulent flows (Acharya and Potter, 2021; Laleh et al., 2012). The computational domain was discretized using a structured rectangular mesh, as shown in Figure 6(a). A base cell size of 0.03 m was applied, yielding 9,625 cells over the domain. To enhance resolution, the mesh was refined to 0.02 m around the inlet baffle (Figure 6(b), 1,150 cells) and further to 0.015 m near the perforation openings (Figure 6(c), 490 cells around 1 opening) to accurately capture the velocity gradients and shear layers in these regions.

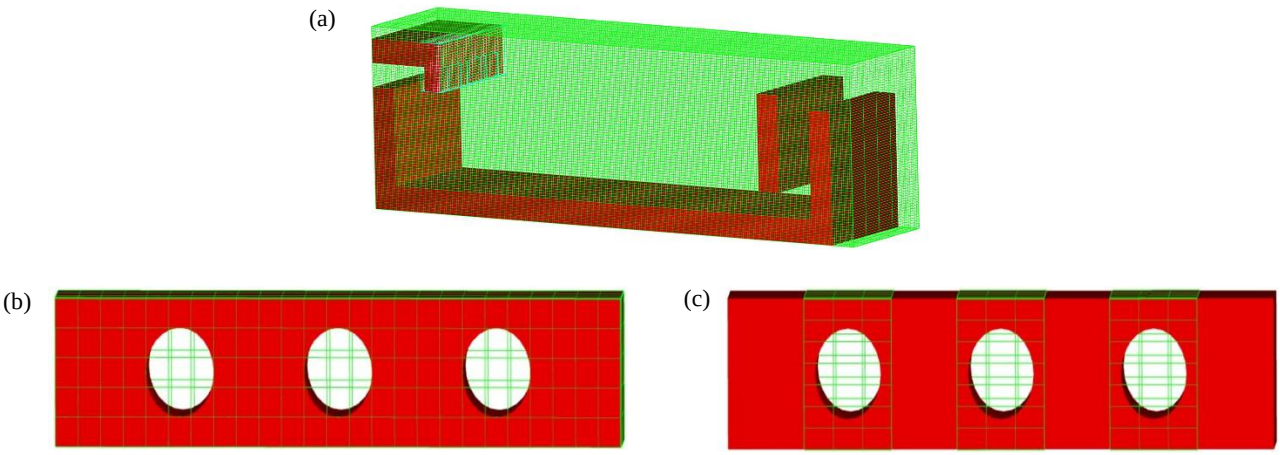

Figure 6. Mesh distribution and refinement in the numerical model: (a) Overall mesh domain, (b) around the inlet baffle, (c) the perforation openings of the baffle

The boundary conditions are illustrated in Figure 7(a). No-slip boundary conditions were also applied on every immobile wall. The inlet was also defined as a specific velocity boundary in the x-direction, the outlet was used as the outflow boundary condition, and the free surface on the top was modeled using the volume of fluid (VOF) method. Additionally, the FAVOR (Fractional Area/Volume Obstacle Representation) technique was used to accurately represent the internal geometry and the shape of the baffle within the computational domain, as seen in Figure 7(b).

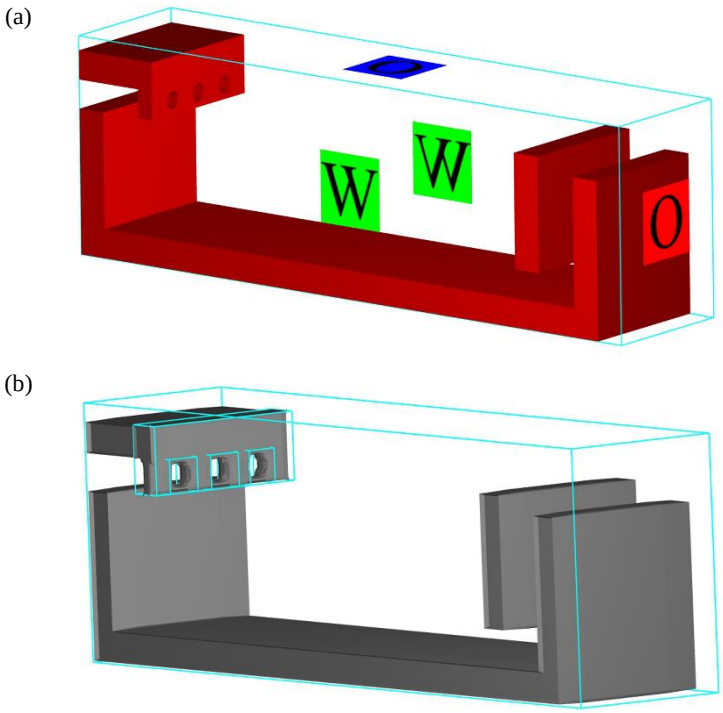

Figure 7. Numerical model of the gravity separation tank: (a) boundary condition, (b) FAVOR render

3. RESULTS AND DISCUSSION

3.1 Flow field pattern

In the current study, as shown in Figure 8, streamline analysis identified significant differences in the recirculation zones for the two perforated baffle geometries, both measuring an equal hole diameter of 6 cm. The recirculation area was calculated based on the total tank area using a numerical technique. In case (a), which represented the 3-hole baffle, the recirculation area covered about 59% of the tank area, reflecting a larger internal circulation area. By contrast, case (b), utilizing the 2-hole baffle, had a smaller recirculation area that covered about 45% of the tank area. A larger recirculation area is undesirable, as it represents stagnant regions and flow short-circuiting that decrease the effective separation zone. Conversely, smaller recirculation areas in case (b) indicate more stable flow patterns and enhanced conditions for oil-water separation. Such flow conditions are typically desirable for promoting the coalescence and upward movement of oil droplets, hence increasing the overall efficiency of FOG separation.

3.2 Flow uniformity

For maximum separation effectiveness, there is a need to have a low horizontal velocity in the tank since this facilitates oil droplet coalescence, resulting in a more balanced flow pattern. Vertical motion of oil droplets is controlled mainly by the density and viscosity of fluids, along with size (Hussein et al., 2013). Droplets that are larger in size mostly rise faster than those that are small in size. It is, therefore, necessary to reduce horizontal velocity variations around the region near the inlet to improve internal flow structure. Consequently, the tank should be designed so that the velocity of the incoming flow is reduced to a minimum. The efficiency of the baffle with openings at the position of 0.15 m was analyzed through the comparison of the deviations of horizontal velocity (x-velocity) at various points across the longitudinal section. The standard deviations of the

horizontal velocity within the separation tank across the locations of x=0.2, 0.6, 1.00, and 1.60 are presented in Table 1 for both baffle arrangements at the measurement position of 0.15 m.

The baffle arrangement case (b) showed the highest efficiency since it registered the smallest deviations in velocity.

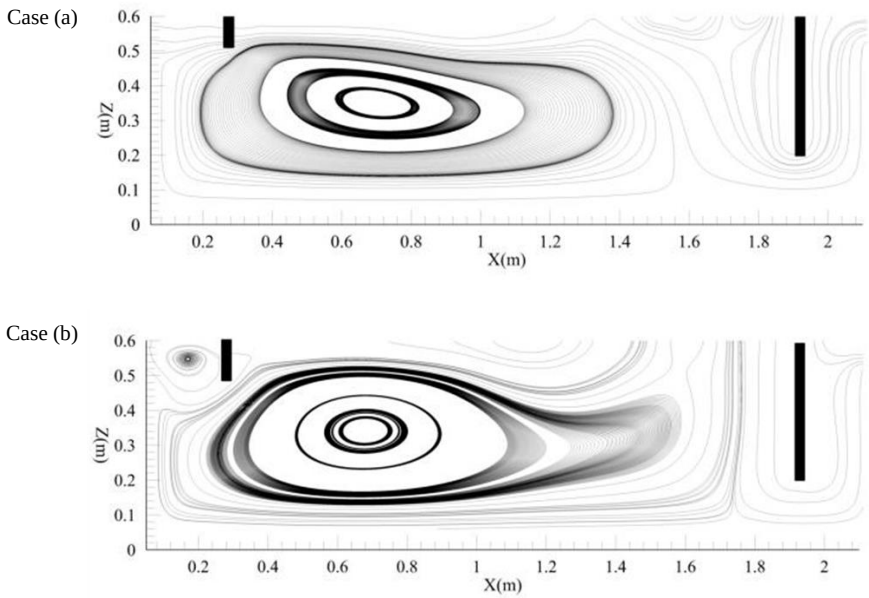

Figure 8. Streamline patterns in a rectangular gravity separator tank with inlet perforated baffles: (a) baffle with 3 openings, (b) baffle with 2 openings

Table 1. Velocity deviation in the separation tank

Cases	Description of inlet perforated baffle	SD of x-velocity (m/s)*E-02 Sections x(m)			
		0.20	0.60	1.00	1.60
a	3 openings with a diameter of 6 cm	5.22	8.06	8.43	4.06
b	2 openings with a diameter of 6 cm	1.55	0.49	0.25	0.41

3.3 Kinetic energy and velocity profile

Kinetic energy (KE) is a key parameter for evaluating the degree of turbulence within a separation tank. In this research, KE values have been calculated based on the horizontal velocity components measured at different points around the tank. In this research, two types of baffles have been considered, namely the two-hole and three-hole baffle types. When fluid flows through three holes created at one point on a baffle, three equal jets are generated, and then they meet, as observed from Figure 9(a). In this case, a large turbulent region is observed, situated above half of the tank volume. Two equal jets of fluid pass through holes situated on the boundary of the two-hole baffle, as observed from Figure 9(b). The shear layers around the jets create localized areas of increased turbulence. Downstream of the baffle, these jets expand and merge, forming a turbulent zone that extends through the upper part of the tank toward the outlet, while the lower region remains relatively calm, except for limited disturbances near the bottom.

Lower turbulence levels in this case promote better conditions for oil droplet rise and coalescence. The two-hole baffle recorded a KE value of 4.24E-04 m^2/s^2, indicating a stable flow pattern, whereas the three-hole baffle showed a higher KE of 8.50E-03 m^2/s^2, reflecting stronger turbulence that can reduce separation efficiency.

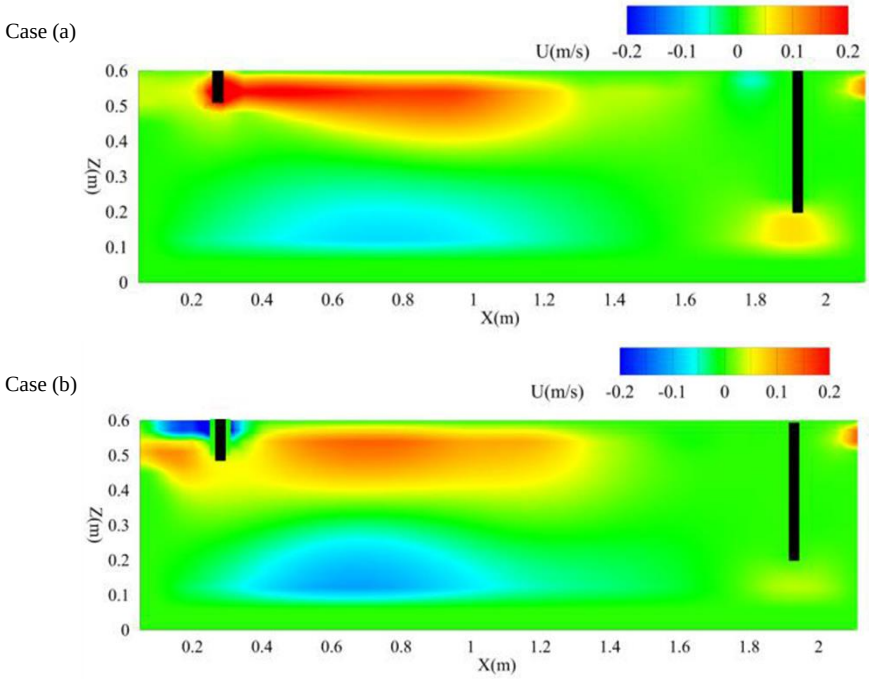

Figure 9. The x-velocity contours in a rectangular gravity separator tank that uses inlet perforated baffles:(a) baffle with 3 openings, (b) baffle with 2 openings.

As seen in Figure 10, the velocity distribution indicates the fact that the 2-hole baffle increases the tank's flow stability by inducing a uniform flow profile at reduced velocities. The 3-hole baffle, however, produced higher relative velocities. Overall, the number of perforations had a marked impact on the hydraulic behavior of the separator, with a smaller number of openings being associated with enhanced separation efficiency and reduced turbulence intensity.

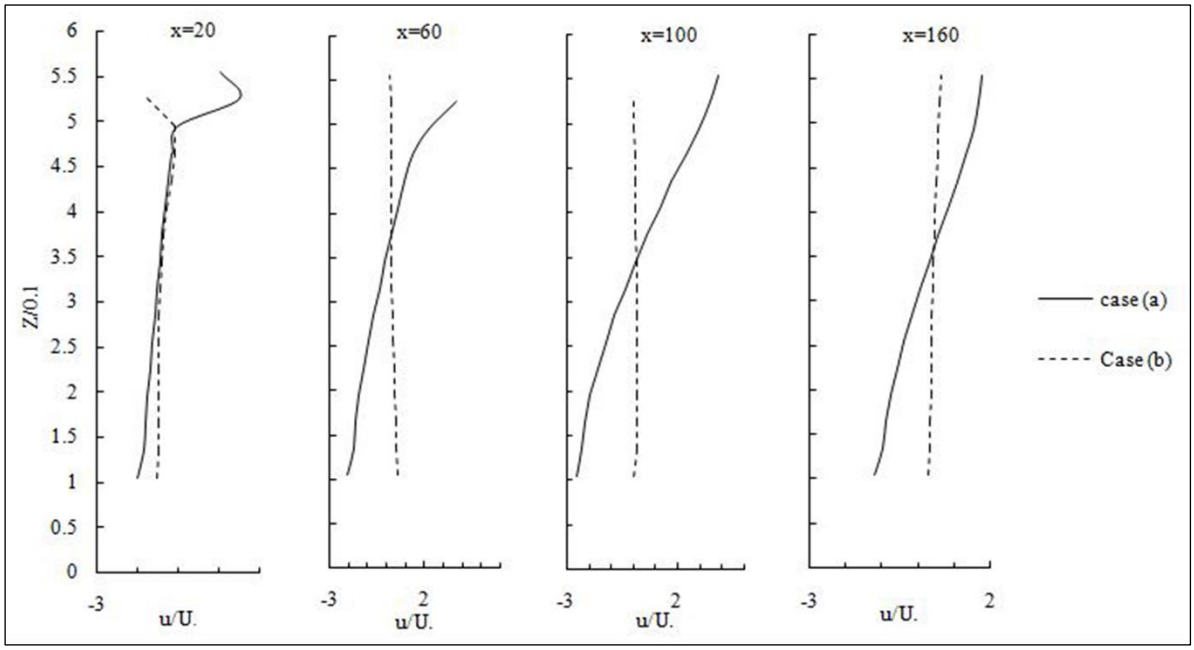

Figure 10. Compares the x-velocity distribution for two different cases of perforated baffles: (a) baffle with 3 openings, (b) baffle with 2 openings

Finally, the present results indicate that a reduced number of perforations is associated with improved separator performance, as indicated by reduced standard deviation in velocity, decreased kinetic energy, and reduced recirculation areas. The result supports the assertions made by Wilkinson et al. (2000) on the efficacy of perforated baffles in creating flow uniformity, and the optimal number of openings with the highest possible value of free area was also advocated to produce velocity uniformity with suppressed velocity variations. Moreover, Mee and Nor (2011) recognized that the greater the number of openings, the greater is the value of the free area, hence the reduction in the inlet velocity with turbulence. The variations may be due to geometric or operational considerations. In particular, Mee and Nor (2011) clearly support the importance of utilizing the perforated baffles in managing the dynamics of the flow process, leading to the intensification of separation efficiency.

4. CONCLUSION

This work used numerical simulation to analyze the hydraulic performance of the rectangular gravity separator with the perforated inlet baffles. The CFD simulation was validated with the existing experiments, which ensured the simulation result's accuracy for the simulation process. Although the opening diameter of both models was the same (6 cm), the number of openings had an effect on the flow inside. The outcomes of the study indicated that the 2-hole baffle provided better hydraulic performance compared to the 3-hole baffle design. In particular, the 2-hole design assisted in the reduction of the kinetic energy (KE) from 8.50E-03 to 4.24E-04, the standard deviation of velocity from 2.85E-01 to 2.71E-02, and the recirculation area from 59% to 45%. The observed improvements demonstrated a significant reduction in turbulence levels, which enhanced the uniformity of the velocity profile and increased the efficiency of oil droplet coalescence, rise, and oil-water separation. The study indicates that the fewer the number of inlet baffle perforations, the more efficient the gravity separation process will be.

AUTHOR CONTRIBUTIONS

The first author (Muna S. Resin) developed the research idea and study design. She conducted the numerical modeling, executed the simulation tasks, analyzed the obtained results, and prepared the initial manuscript draft.

The corresponding author (Haitham A. Hussein) provided scientific oversight throughout the study, reviewed and interpreted the results, and contributed to manuscript refinement and final approval of the version submitted for publication.

DECLARATION OF CONFLICT OF INTEREST

The authors declare that they have no known competing financial interests or personal relationships that could have appeared to influence the work reported in this paper.

REFERENCES

Acharya T, Potter T. A CFD study on hydrocarbon mean residence time in a horizontal oil-water separator. SN Applied Sciences 2021;3(4):1-10.

Adams EW, Rodi W. Modeling flow and mixing in sedimentation tanks. Journal of Hydraulic Engineering 1990;116(7):895-913.

Akpan DG. Performance of Internals in Three-Phase Tank Separators [dissertation]. Norway, Norwegian University of Science and Technology; 2013.

Al-Yacouby AM, Ahmed MM. A numerical study on the effects of perforated and imperforate baffles on the sloshing pressure of a rectangular tank. Journal of Marine Science and Engineering 2022;10(10):Article No. 1335.

Azimi H, Shabanlou S. U-shaped channels along the side weir for subcritical and supercritical flow regimes. ISH Journal of Hydraulic Engineering 2018;26(4):365-75.

Aziz TN. Analysis of Grease Abatement Devices and the Measurement of Fat, Oil, and Grease in Food Service Establishment Waste Streams [dissertation]. Raleigh, North Carolina, USA, North Carolina State University; 2010.

Efendioglu A, Mendez J, Turkoglu H. The numerical analysis of the flow and separation efficiency of a two-phase horizontal oil-gas separator with an inlet diverter and perforated plates. Advances in Fluid Mechanics 2014; 82:133-42.

Jameel AT, Muyubi SA, Karim MIA, Alam MZ. Removal of oil and grease as emerging pollutants of concern (EPC) in wastewater stream. IIUM Engineering Journal 2011;12(4):161-9.

Joshy A, MA A, Nambiar A. CFD Analysis and optimization of three phase oil separator. Proceedings of the International Conference on Systems, Energy and Environment; 2022 Aug 5-6; Kannur, Kerala, India; 2022.

Hafsi Z, Elaoud S, Mishra M, Wada I. Numerical study of droplets coalescence in an oil-water separator. Proceedings of the 7th International Conference on Advances in Mechanical Engineering and Mechanics; 2019 December 16-18; Hammamet, Tunisia; 2020. p. 449-54.

Hirt C, Sicilian J. A porosity technique for the definition of obstacles in rectangular cell meshes. Proceedings of the 4th International Conference on Ship Hydrodynamics; 1985 Sep 24-27; Washington, DC; 1985.

Hirt CW, Nichols BD. Volume of fluid (VOF) method for the dynamics of free boundaries. Journal of Computational Physics 1981;39(1):201-25.

Hussein HA, Abdullah R, Harun S, Abdulkhaleq M. Numerical model of baffle location effect on flow pattern in oil and water gravity separator tanks. World Applied Sciences Journal 2013;26(10):1351-6.

Ibrahim AA, Najim YM, Dawood AS. Three phase oil separator simulation using CFD analysis: A review study. Al-Rafidain Engineering Journal 2024;29(2):10-8.

Kim S, Kim H, Jeong HS, Kim Y. Optimal design of perforated baffles for enhancing oil-water separation performance using genetic algorithms. Results in Engineering 2025;26:Atticle No. 104668.

Keener KM, Ducoste JJ, Holt LM. Properties influencing fat, oil, and grease deposit formation. Water Environment Research 2008;80(12):2241-6.

Laleh AP, Svrcek WY, Monnery WD. Design and CFD studies of multiphase separators: A review. The Canadian Journal of Chemical Engineering 2012;90(6):1547-61.

Mattsson J, Hedström A, Viklander M, Blecken G-T. Fat, oil, and grease accumulation in sewer systems: Comprehensive survey of experiences of Scandinavian municipalities. Journal of Environmental Engineering 2014;140(3):Article No. 04014003.

Mee CG, Nor MIM. Flow pattern in a horizontal primary separator with a perforated baffle. Journal of the Institution of Engineers Malaysia 2011;72(3):19-25.

Metcalf, Eddy A. Wastewater Engineering: Treatment and Resource Recovery. 5th ed. McGraw-Hill Education; 2014.

Nascimento JBDS, Ferreira AD, Vasconcelos AL, De Farias Neto SR. Study of the influence of Semi-porous baffles on the three-phase separation efficiency in a horizontal separator vessel via CFD. Journal of Petroleum Science and Technology 2024;14(3):50-9.

Sadiq FA, Hussien HA, Zainol MR. Numerical investigation of hydraulic performance in Makhool Spillway Dam. Environment and Natural Resources Journal 2025;23(2): 142-9.

Selim T, Hamed AK, Elkiki M, Eltarabily MG. Numerical investigation of flow characteristics and energy dissipation over piano key and trapezoidal labyrinth weirs under free-flow conditions. Modeling Earth Systems and Environment 2023;10(1):1253-72.

Shahrokhi M, Rostami F, Said MAM, Yazdi SRS. The effect of number of baffles on the improvement efficiency of primary sedimentation tanks. Applied Mathematical Modelling 2012;36(8):3725-35.

Southerland R. Sewer fitness: Cutting the fat. American City and County 2002;117(15):27-31.

Versteeg HK, Malalasekera W. An Introduction to Computational Fluid Dynamics the Finite Volume Method. 2nd ed. India: Pearson Education; 2007.

Wilkinson D, Waldie B, Nor MM, Lee HY. Baffle plate configurations to enhance separation in horizontal primary separators. Chemical Engineering Journal 2000;77(3):221-6.

Yakhot V, Smith LM. The renormalization group, the ε-expansion and derivation of turbulence models. Journal of Scientific Computing 1992;7(1):35-61.

Yakhot V, Orszag SA. Renormalization group analysis of turbulence. I. Basic theory. Journal of Scientific Computing 1986;1(1):3-51.

Yusuf F, Micovic Z. Prototype-scale investigation of spillway cavitation damage and numerical modeling of mitigation options. Journal of Hydraulic Engineering 2020;146(2):Article No. 04019057.

Yu L, Han M, He F. A review of treating oily wastewater. Arabian Journal of Chemistry 2017;10:1913-22.